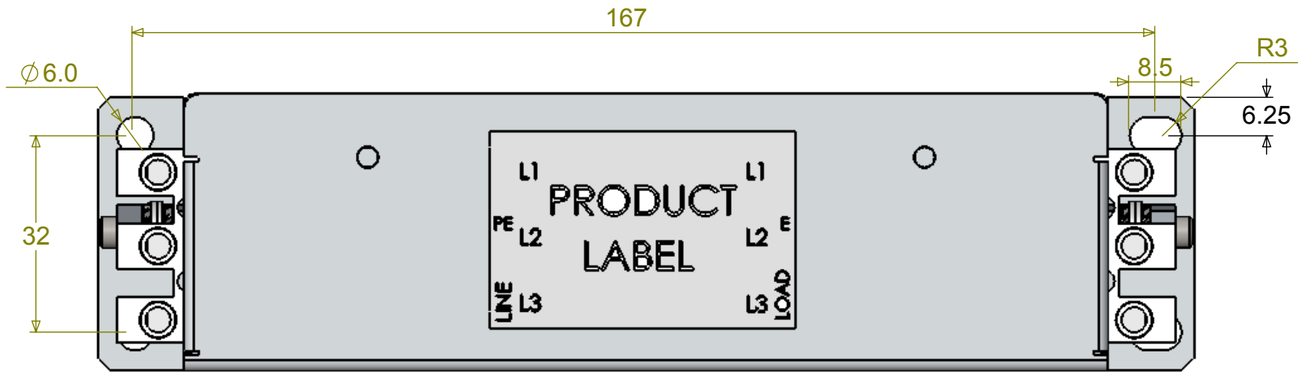

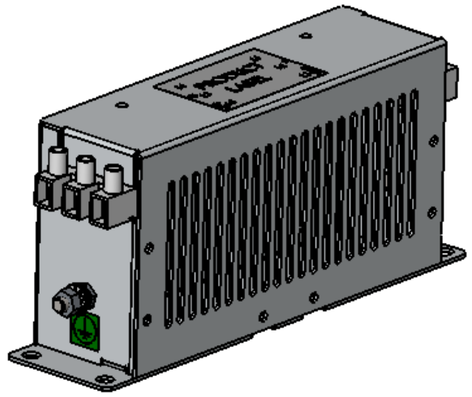

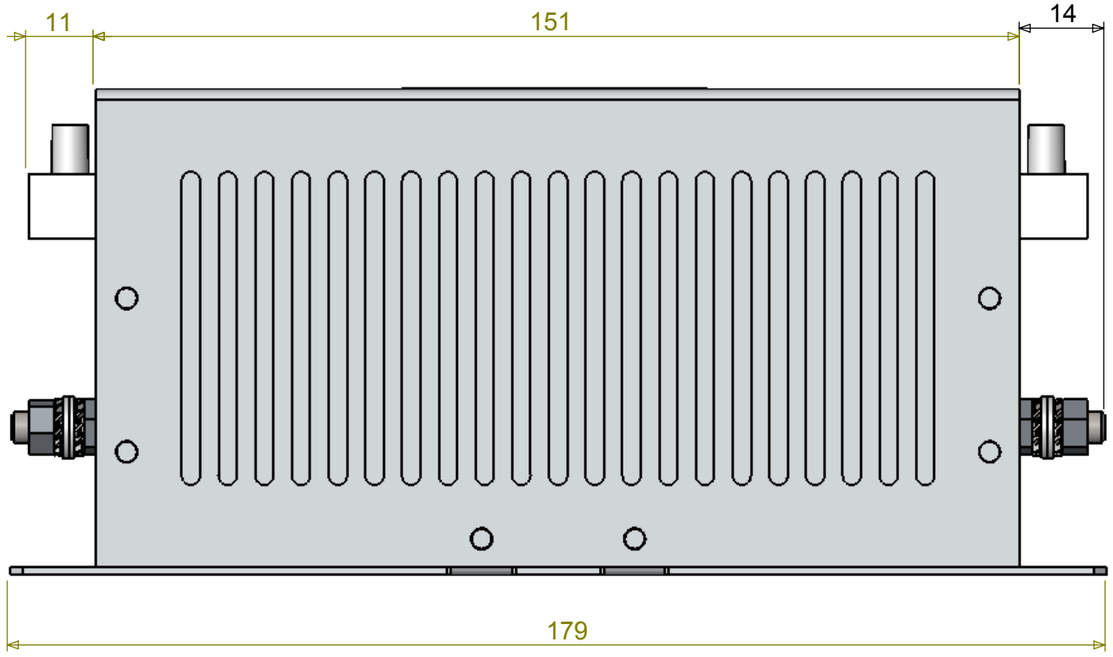

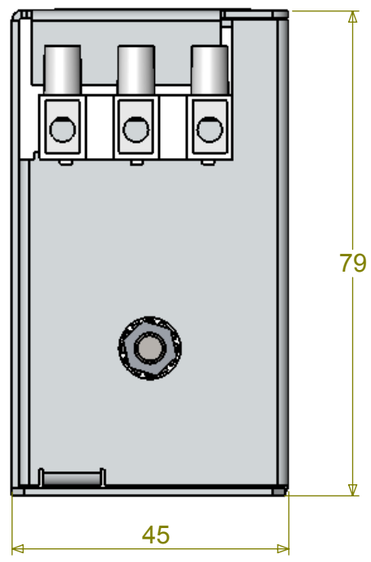

SPECIFICATIONS

ELECTRICAL
3PH AC Line Filter
line voltage 500V (+10%)
input current 10A @ 40ºC
operating frequency 50/60Hz
voltage withstand 2150Vdc 1s
insulation resistance 500Vdc 2 MOhm
leakage current
<34mA fault
<1.4mA running
watts dissipation 4.2W

MECHANICAL
ingress protection IP20
mass unpackaged 700g
aluminium enclosure
mounting centres (see drawing)
terminal connection 6sqmm
terminal earthing M5 stud
terminal torque 7lbin (0.8Nm)

ENVIRONMENT
humidity 90% RH (Non-condensing)
pollution class II
temperature -25/+100ºC
vibration 10-200Hz 1.8G

APPROVALS
EN60939-1, EN60950, EN50178, EN61010-1
UL1283 5th EDITION
C22.2 No8

Tel No.+44(0)1724273200 Website www.dem-uk.com

PROPRIETARY AND CONFIDENTIAL
THE INFORMATION CONTAINED IN THIS DRAWING IS THE SOLE PROPERTY OF **ALPHA 3 MANUFACTURING**. ANY REPRODUCTION IN PART OR AS A WHOLE WITHOUT THE WRITTEN PERMISSION OF **ALPHA 3 MANUFACTURING** IS PROHIBITED.

DEM Manufacturing, Deltron Emcon House
Hargreaves Way, Sawcliffe Ind. Park,
Scunthorpe, North Lincolnshire, DN15 8RF, UK

UNLESS OTHERWISE SPECIFIED:
DIMENSIONS ARE IN MILLIMETRES
LINEAR TOLERANCE:
NO DECIMAL PLACES ±0.5mm
1 DECIMAL PLACE ±0.25mm
2 DECIMAL PLACES ±0.125mm
ANGULAR TOLERANCE: ±1˚

FINISH .
DEBURR AND BREAK SHARP EDGES
IF IN DOUBT ASK
DO NOT SCALE DRAWING
MATERIAL .

DRAWN BY SPB
APPROVED BY SW
THIRD ANGLE PROJECTION
SHEET 1 OF 1
SCALE 1:1
A3

TITLE GENERAL SPECIFICATION FOR KMF310A
DRAWING NO. KMF310A
ISSUE 04
Release