WIRING DIAGRAMS

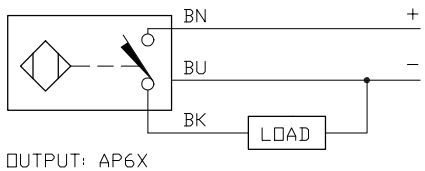

OUTPUT: AP6X

SHORT-CIRCUIT AND OVERLOAD PROTECTED

LOCKNUT LN-M12

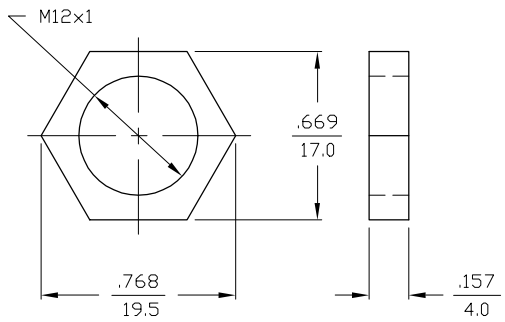

SPECIFICATIONS

OPERATING VOLTAGE	10-30 VDC
RIPPLE	≤10%
HYSTERESIS (DIFFERENTIAL TRAVEL)	3-15% (5% TYPICAL)
VOLTAGE DROP ACROSS CONDUCTING SENSOR	≤1.8 V at 200 mA
OUTPUT FUNCTION	NORMALLY OPEN 3-WIRE DC SELF-CONTAINED
TTL COMPATIBLE	NO
SHORT-CIRCUIT PROTECTED	YES
TRIGGER CURRENT FOR OVERLOAD PROTECTION	≥220 mA
CONTINUOUS LOAD CURRENT	≤200 mA
OFF-STATE (LEAKAGE) CURRENT	<10 μA
NO-LOAD CURRENT	5.5-9.5 mA
TIME DELAY BEFORE AVAILABILITY	≤8 ms
POWER-ON EFFECT PROTECTION	INCORPORATED
REVERSE POLARITY PROTECTION	INCORPORATED
WIRE-BREAK PROTECTION	INCORPORATED
PROTECTION AGAINST TRANSIENTS	2 kV, 1 ms, 1 kΩ
OPERATING TEMPERATURE	-25°C to +70°C (-13°F to +158°F)
ENCLOSURE	MEETS NEMA 1, 3, 4, 6, 13 AND IEC IP67
SHOCK	30 g, 11 ms
VIBRATION	55 Hz, 1 mm AMPLITUDE (IN ALL 3 PLANES)
LED FUNCTION	RED: OUTPUT ENERGIZED
SENSING RANGE	2 mm = .079" (NOMINAL)
SWITCHING FREQUENCY	2000 Hz
REPEATABILITY	≤2% of RATED OPERATING DISTANCE
EMBEDDABLE (SHIELDED)	YES

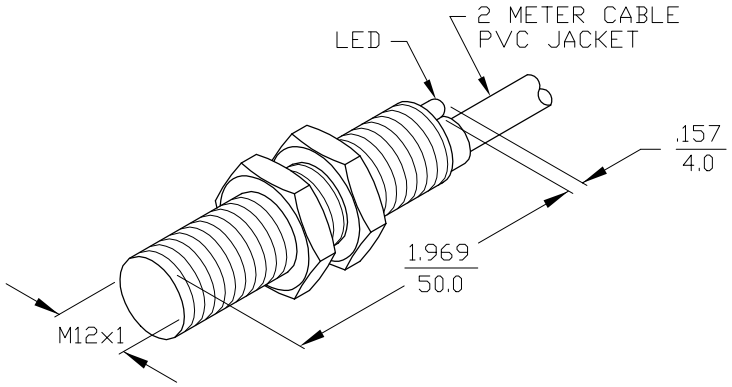

REV	DESCRIPTION	DRFT	DATE	CHKD

REVISIONS

MATERIAL: BRASS BARREL

FINISH: COPPER/NICKEL/ CHROME PLATING

DRWN GMB DATE 2/6/91

CHKD DATE

TMI

DIMENSIONS ARE IN INCHES / mm

3RD ANGLE PROJECTION

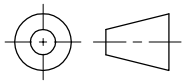

TURCK INC
3000 CAMPUS DRIVE
MINNEAPOLIS, MN 55441
PHONE: (612) 553-9224

PART NO. Bi2-G12-AP6X 50MM

SIZE B | ID NO. 4635400 | REV

SCALE NONE | BMPC-D\4635400 | SHEET OF

This Document Was Officially Certified By TURCK Inc. On 1/28/2003 5:37:43 PM