THIS DRAWING IS UNPUBLISHED. RELEASED FOR PUBLICATION JUNE ,2004.
© COPYRIGHT 2004 BY TYCO ELECTRONICS CORPORATION. ALL RIGHTS RESERVED.

LOC	DIST
E	B

REVISIONS

P	LTR	DESCRIPTION	DATE	DWN	APVD
	B	ECR-06-026419	09NOV06	JMS	FWK

NOTES

1. SINGLE PACK IN ACCORDANCE WITH AMP SPEC 107-3275
2. 100 TRAY PACK IN ACCORDANCE WITH AMP SPEC 107-3275
3. Au PLATING
4. ELECTRICAL CHARACTERISTICS
   - FREQUENCY RANGE: DC-3GHz
   - NOMINAL IMPEDANCE: 50 OHMS
   - INSULATION RESISTANCE: 5000 MOHMS
   - DIELECTRIC WITHSTAND VOLTAGE: 500V RMS
   - CONTACT RESISTANCE:
   - CENTRE CONTACT: 3 mOHMS
   - OUTER CONTACT: 2 mOHMS
5. MECHANICAL CHARACTERISTICS
   - DURABILITY: 50 CYCLES
   - TORQUE SETTING 0.15-0.20 NM
6. FOR TECHNICAL DATA REFER TO YOUR LOCAL TYCO ELECTRONICS SALES OFFICE
7. ALL DIMENSIONS ARE NOMINAL FOR REFERENCE ONLY UNLESS OTHERWISE STATED

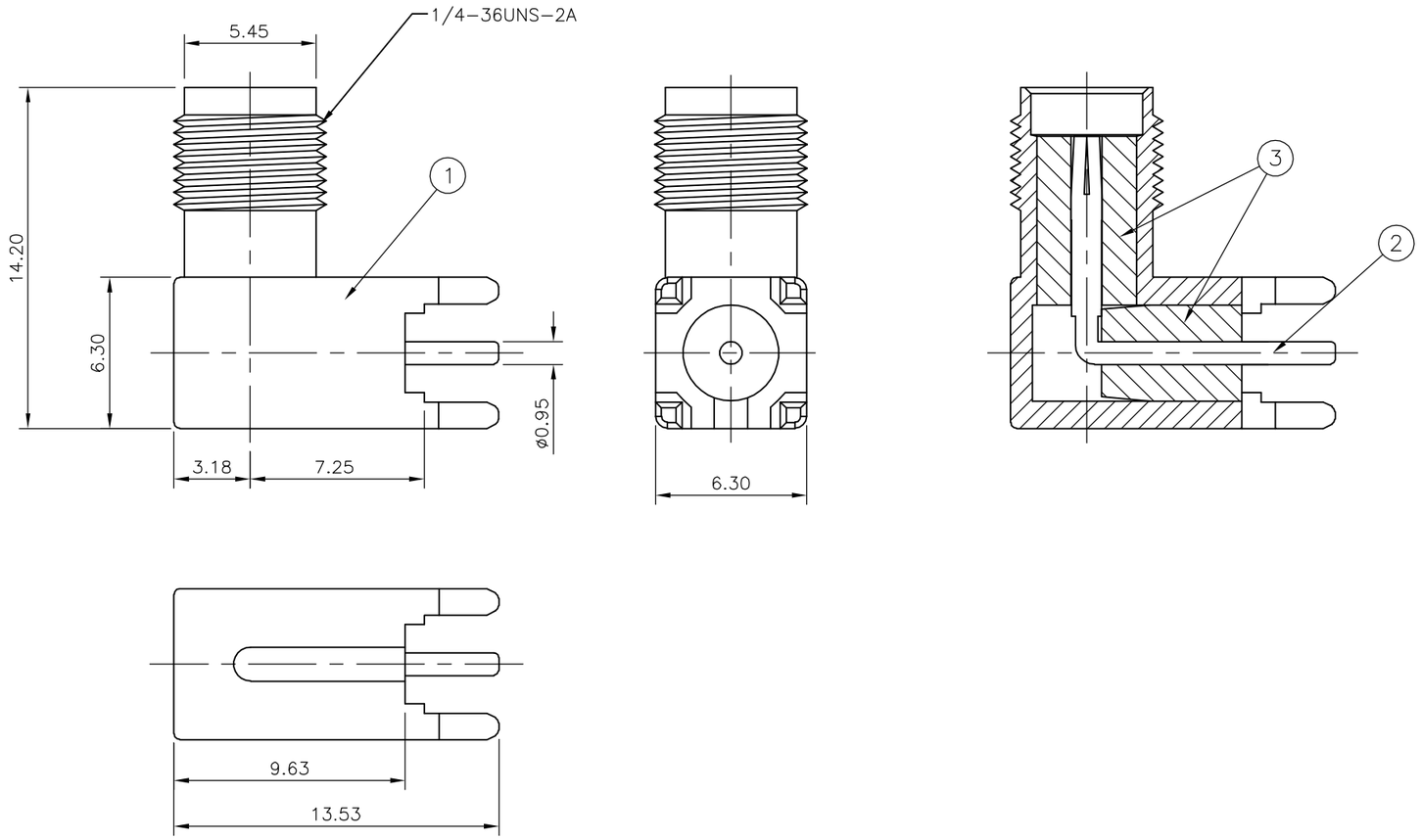

RECOMMENDED PCB LAYOUT
WITH MOUNTING POSTS

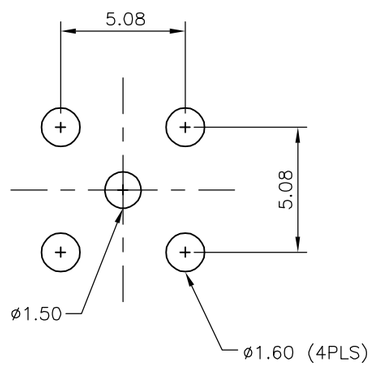

QUANTITY PER ASSY								PARTS LIST		
						1	1	PTFE	INSULATOR	3
						1	1	BERYLLIUM COPPER (3)	CONTACT	2
						1	1	ZINC ALLOY (3)	BODY	1
						5--1	5--0	MATERIAL	DESCRIPTION	ITEM
						(1)	(2)			

THIS DRAWING IS A CONTROLLED DOCUMENT.

DIMENSIONS: mm

TOLERANCES UNLESS OTHERWISE SPECIFIED:
0 PLC ± –
1 PLC ± –
2 PLC ± –
3 PLC ± –
4 PLC ± –
ANGLES ± –

MATERIAL: SEE TABLE

FINISH: –

DWN J.SANDWELL 16JUN04
CHK S.PARLOW 16JUN04
APVD F.WHEELER-KING 16JUN04
PRODUCT SPEC –
APPLICATION SPEC –
WEIGHT –

CUSTOMER DRAWING

tyco Electronics
Tyco Electronics Corporation
Bideford, UK, EX39 4HE

NAME: SMA RIGHT ANGLE PCB SOCKET DIE CAST
–
–

SIZE	CAGE CODE	DRAWING NO	RESTRICTED TO
A3	00779	C-1814400	–

SCALE NTS | SHEET 1 OF 1 | REV B