ENGLISH

# Datasheet

## Domed Green 22mm lens/bezel lamp holder

**RS Stock number 589-963**

**Drawing mm :**

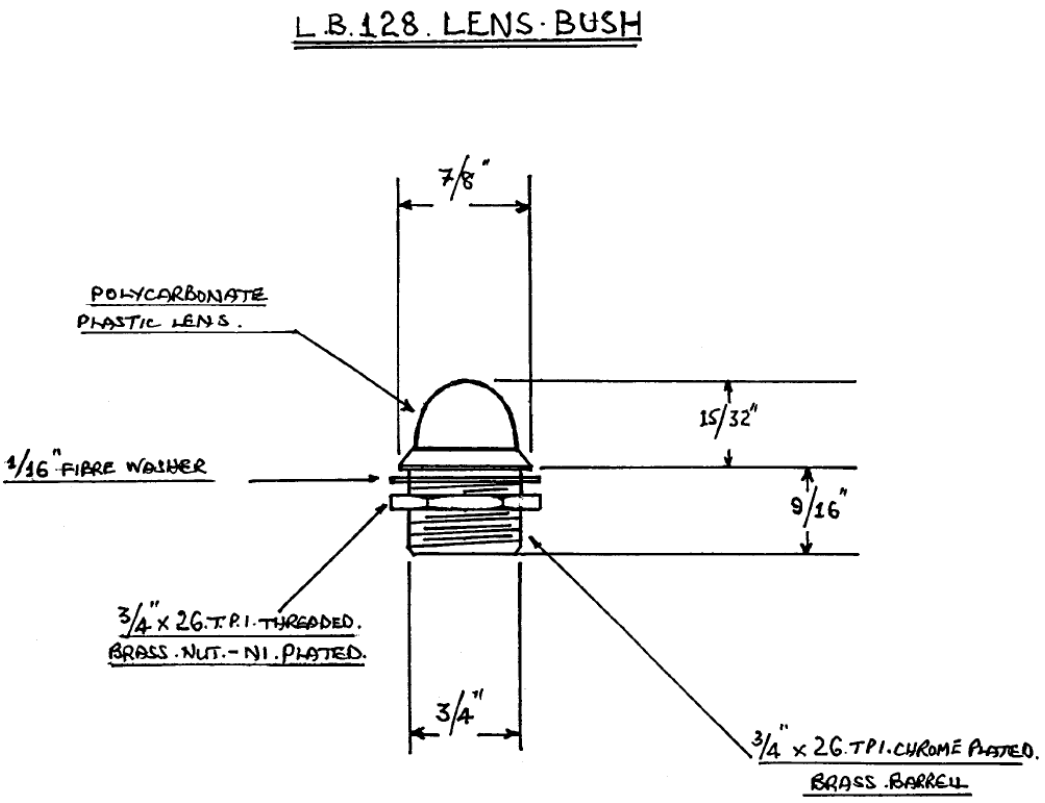


RS, Professionally Approved Products, gives you professional quality parts across all products categories. Our range has been testified by engineers as giving comparable quality to that of the leading brands without paying a premium price.