THIS DRAWING IS UNPUBLISHED. RELEASED FOR PUBLICATION 2000
© COPYRIGHT 2000 BY TYCO ELECTRONICS CORPORATION. ALL RIGHTS RESERVED.

LOC	DIST
IS	–

REVISIONS

P	LTR	DESCRIPTION	DATE	DWN	APVD
	A	-	5APR2001	CM	KM
	B	Update drawing	18.07.2006	AM	DB
	C	ECR-07-018918	13AUG07	AN	DB

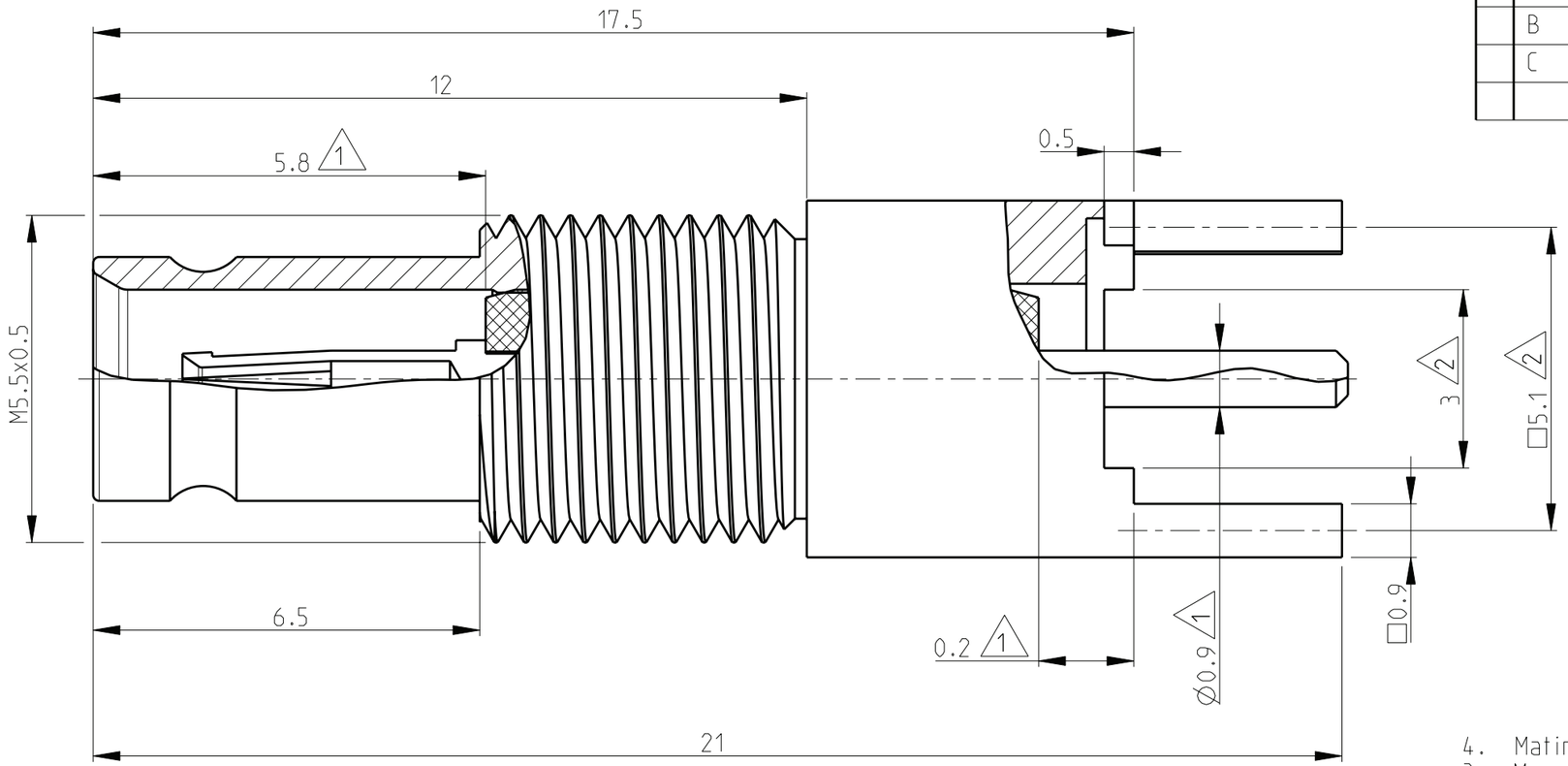

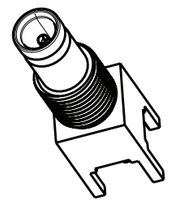

2:1

4. Mating face according to DIN 47297 and CECC 22230
3. Mounting requirements : PCB with Pitch 2.54
Thickness of PCB : ± 3mm
Diameter of bores : 1.5 mm 2

2 Nominal dimension

1 Minimum dimension

All dimensions are max dimensions unless otherwise specified

Recommended PCB layout
Pitch 2.54 mm

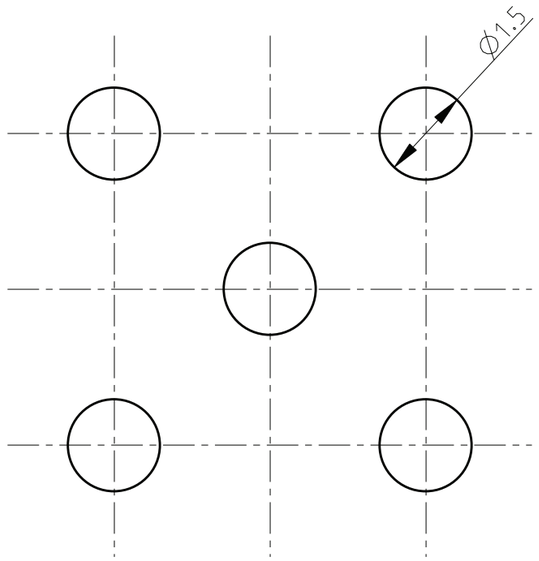

1:1

V23614-A1027-J2	8-1393670-4	Dielectric	PTFE	-
		Outer Con.	Brass	min. 0.1µm Au over min. 2µm NiP
		Center Con.	CuBe/Bronze	min. 0.1µm Au over min. 2µm NiP
Old Nr	TE Nr	Description	Material	Plating

THIS DRAWING IS A CONTROLLED DOCUMENT FOR TYCO ELECTRONICS CORPORATION. IT IS SUBJECT TO CHANGE AND THE CONTROLLING ENGINEERING ORGANIZATION SHOULD BE CONTACTED FOR THE LATEST REVISION.

DIMENSIONS: mm

TOLERANCES UNLESS OTHERWISE SPECIFIED:
0 PLC ±
1 PLC ±
2 PLC ±
3 PLC ±
4 PLC ±
ANGLES ±

MATERIAL –
FINISH –

DWN MOROBE 02APR2001
CHK MATTHEEUWS 4APR2001
APVD BOZZER 5APR2001
PRODUCT SPEC 108-71032
APPLICATION SPEC –
WEIGHT –

Tyco Electronics
Tyco Electronics
CH - Switzerland - Lugano

NAME
BULKHEAD JACK
WITH PCB CONNECTION
1.0/2.3 75 Ohm

SIZE	CAGE CODE	DRAWING NO	RESTRICTED TO
A3	00779	C-8-1393670-4	-

SCALE 10:1 SHEET 1 OF 1 REV C

AMP 1470-19 REV 31MAR2000