Alle Rechte vorbehalten/ *All rights reserved*

Mating face according to: MIL-C-24308 / DIN 41652 / CECC 75.01-802

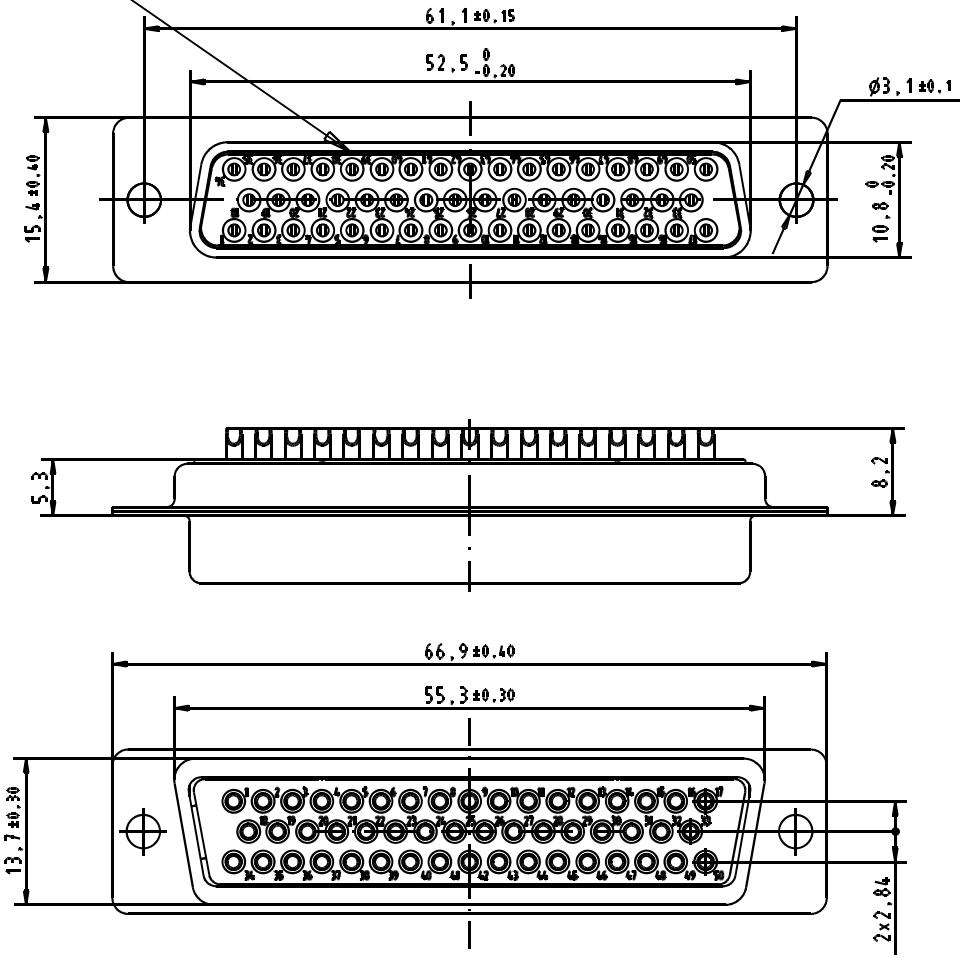

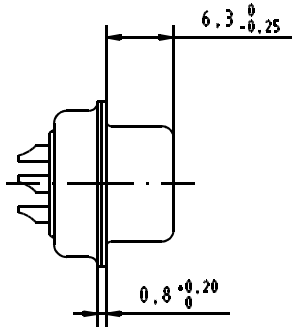

1) Protection standard IP 67 according to IEC 529 / DIN 40050.

2) Cable: AWG 20 max

Part Number	Performance Level
09 67 450 4715	Au plating 0,76 µm mini

Mod.	Dat.	Name
31587	15/02/04	S.H

	Dat.	Name
Detail.	15/02/04	S.H.
Insp.		
Stand.		

All Dim. in mm
Orig. Size DIN A 4

HARTING ELEKTRONIK
F-95972 Paris

D-SUB IP67 female 50 Poles
straight solder cup

Maßstab/ *Scale*

TB 09 67 450 4715

Sub.

Blatt/ *Page*