THIS DRAWING IS UNPUBLISHED. RELEASED FOR PUBLICATION -,- .
© COPYRIGHT - BY TYCO ELECTRONICS CORPORATION. ALL RIGHTS RESERVED.

LOC	DIST
GP	00

REVISIONS

P	LTR	DESCRIPTION	DATE	DWN	APVD
	A	REVISED PER ECO-09-005756	15APR2009	ZMR	SLB

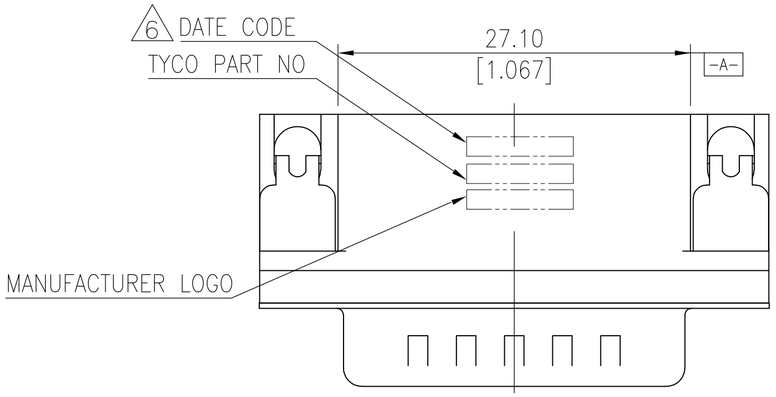

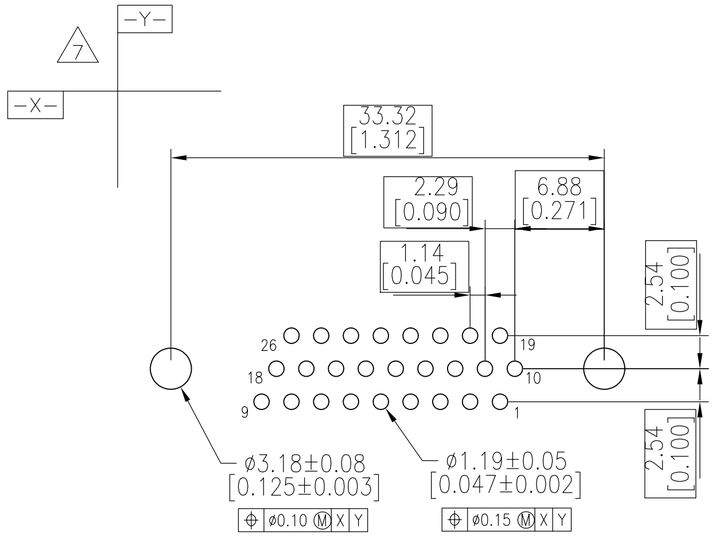

1. HOUSING: PBT, BLACK, UL94V-0.
2. CONTACT: BRASS, GOLD PLATE IN THE MATING AREA (SEE TABLE), 120u" MINIMUM TIN PLATE ON THE SOLDER-TAIL BOTH OVER 50u" MINIMUM NICKEL UNDERPLATE.
3. SHELL: STEEL, NICKEL PLATE.
4. BOARDLOCK: BRASS, 100u" MINIMUM TIN PLATE
5. THREADED INSERT: BRASS, NICKEL PLATE
6. FOUR DIGIT DATE CODE IN THIS FORMAT.

   01 45
   YEAR — MANUFACTURING WEEK

7. DATUMS -X- & -Y- TO BE EXTABLISHED BY CUSTOMER.

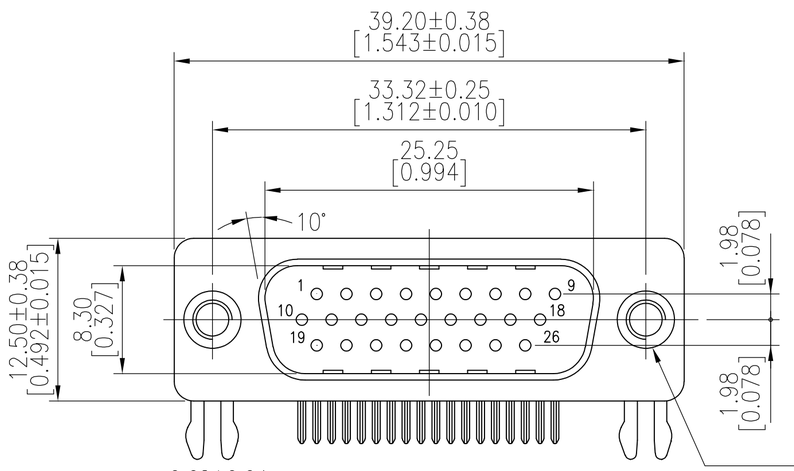

RECOMMENDED PCB LAYOUT

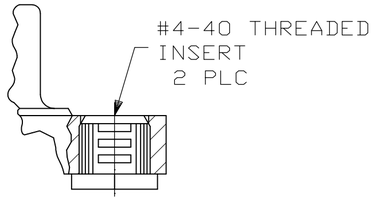

Detail A

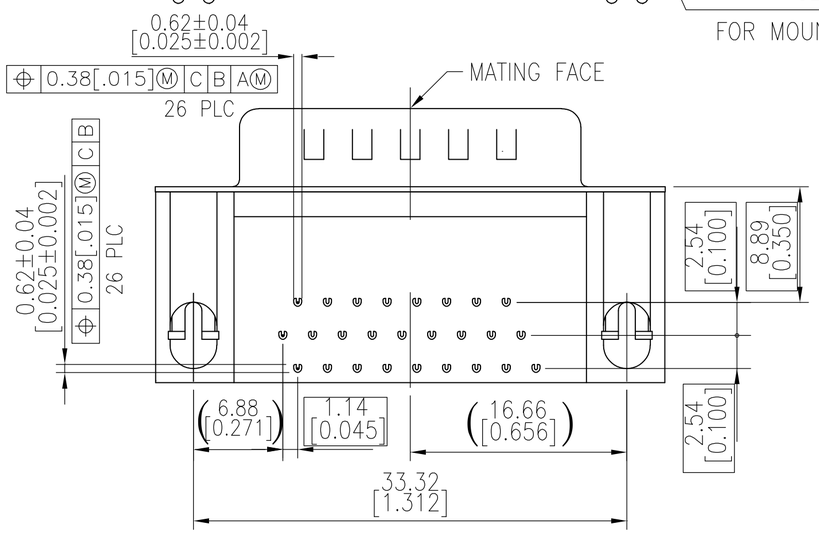

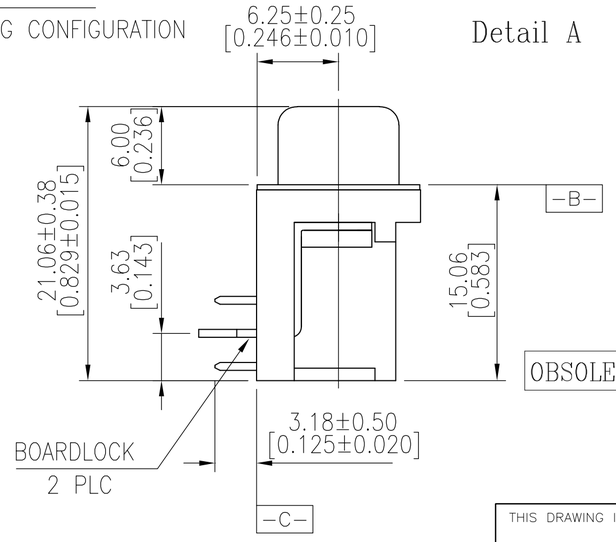

	Tray	Detail A	Gold flash	5749769-3
OBSOLETE	Tray	Detail A	15µ" MIN	5749769-2
	Tray	Detail A	30µ" MIN	5749769-1
	Packaging	Mounting Flange Config	CONTACT MATING AREA FINISH	PART NUMBER

THIS DRAWING IS A CONTROLLED DOCUMENT.

DIMENSIONS: mm [INCHES]

TOLERANCES UNLESS OTHERWISE SPECIFIED:
0 PLC ± -
1 PLC ± 0.30
2 PLC ± 0.20
3 PLC ± 0.10
4 PLC ± -
ANGLES ± 2°

MATERIAL -
FINISH -

DWN R.RICHARDSON 22APR05
CHK S.BOLASH 22APR05
APVD M WALMSLEY -
PRODUCT SPEC —
APPLICATION SPEC —
WEIGHT —

Tyco Electronics
Tyco Electronics Corporation
Harrisburg, Pa 17105-3608

NAME
PLUG ASSEMBLY, RIGHT ANGLE, 26 POSITION, HD-22, AMPLIMITE

SIZE	CAGE CODE	DRAWING NO	RESTRICTED TO
A2	00779	C-5749769	—

CUSTOMER DRAWING | SCALE 1:1 | SHEET 1 OF 1 | REV A

5749769