RES80F12

Rev. 0

CHARACTERISTICS:

Rated Voltage:	250VAC max
Rated Current at Ambient:	12A @ 40°C
Operating Frequency:	DC-400HZ
Climatic Class (IEC60068-1):	25/100/21
Temperature Range:	-25°C to +100°C
Over load Current:	1.5 x Rated Ct. for 1 Min
Operational Leakage current : (at 230VAC/50Hz and Total C +/-20%)	0.734 mA max
Worst case Leakage current : (N interrupted and Total C +/-20%)	<1.101 mA max
DCR @ 25°C (+/-25%) :	60 mΩ
Test Voltage (100%) for 2 sec:- L-N:	1100VDC
L-GND:	3000VDC
Ingress Protection:	IP 20
Weight (Approximate):	650 gr

FILTER PARAMETERS:

Total Inductance (L-L'+N-N') @10KHz:	3.30mH +50%,-30%
Total Capacitance (L-L/L-N) @1KHz:	2µF +/ -20%
Total Capacitance (L/N-PE) @1KHz:	4.7nF +/ -20%
Total Resistance (L-L/L-N):	0.22MΩ +/ -10%
Total Resistance (L/N-GND):	

APPROVALS:

REACH
RoHS
UL

APPROVED BY AJAY

Date: 10-04-2014

ROXBURGH EMC
Tel:- +44(0) 1724 273200
email:- sales@dem-uk.com
web :- www.dem-uk.com/roxburgh

CIRCUIT DIAGRAM:

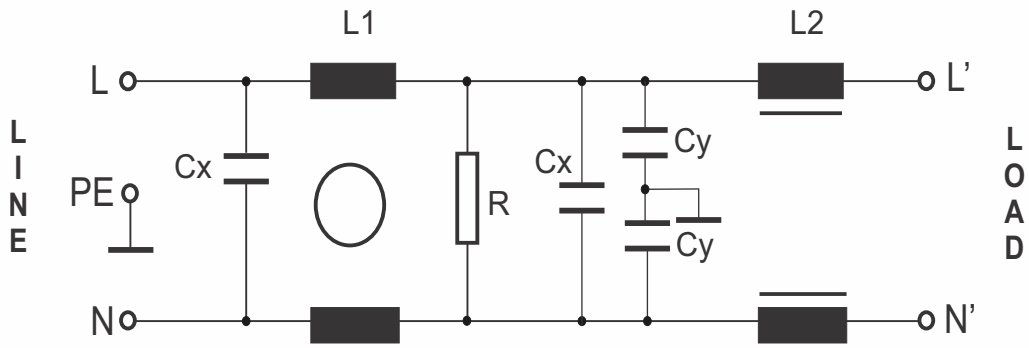

MECHANICAL DIMENSION (mm):

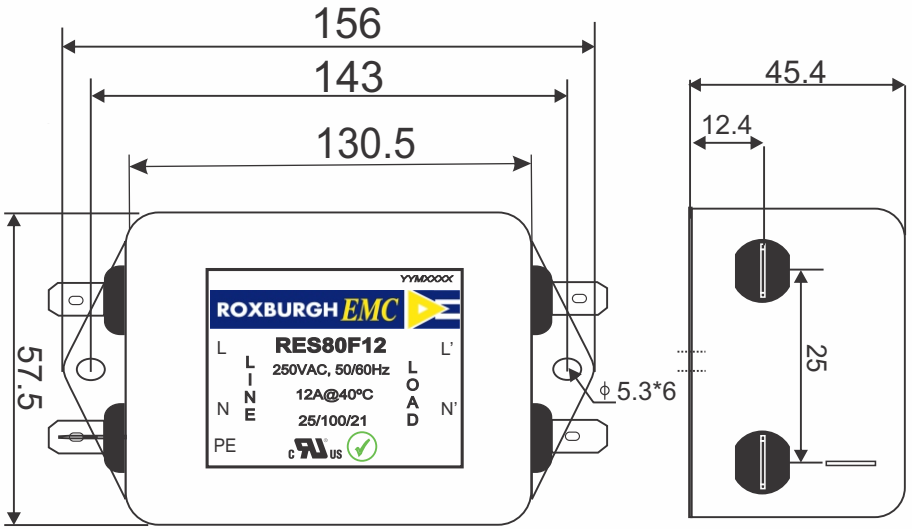

Note:

Housing matl. Fe with Ni Plated
Fast-On Terminal (6.3 x 0.8mm)
Connections

TOLERENCE: +/-1.0 mm

ROXBURGH EMC

FILTER INSERTION LOSS CHARACTERISTICS
CISPR 17 - 50 OHM METHOD

RES80F12

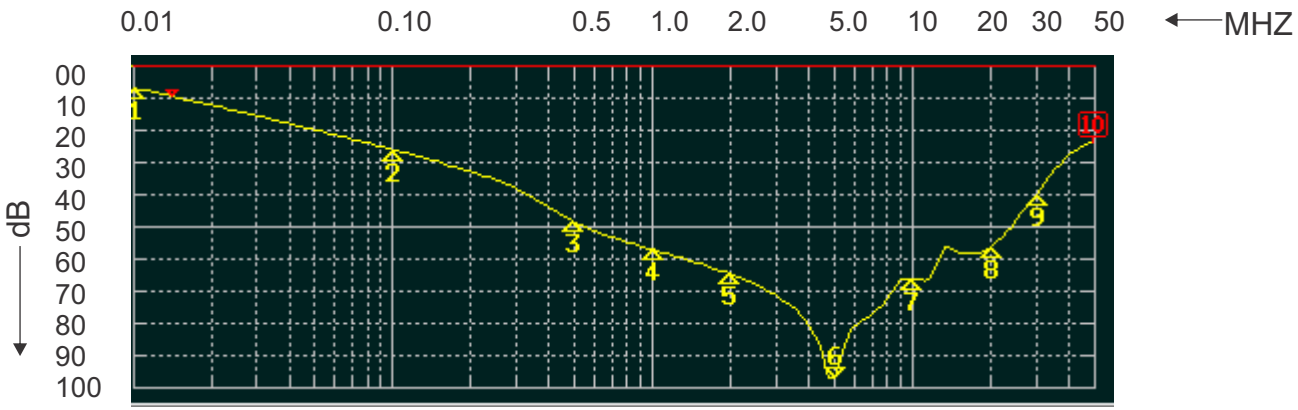

COMMON MODE

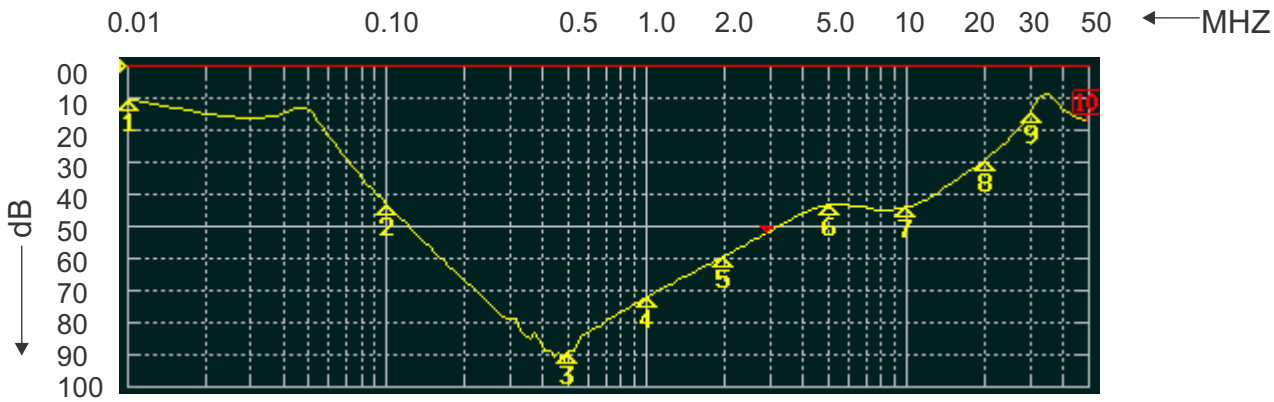

DIFFERENTIAL MODE