PRODUCT DATASHEET
Strada-T series
last update 14/11/2012

Ordering number C11415_STRADA-T-DN

Family	Strada-T	FWHM	Asym degrees
Type	Lens	Efficiency	92 %
LED	LUXEON A	cd/lm	-
Color	Clear	Gerber File	Available
Diameter	19.8 x 15.5 mm		
Height	8.75 mm		
Style	Rectang		
Optic Material	PMMA		
Holder Material	-		
Fastening	Screw, pin, glue		
Status	Ready		

Ordering number CA11416_STRADA-T-DN

Family	Strada-T	FWHM	Asym degrees
Type	Assembly	Efficiency	92 %
LED	LUXEON A	cd/lm	-
Color	Clear	Gerber File	Available
Diameter	19.8 x 15.5 mm		
Height	8.75 mm		
Style	Rectang		
Optic Material	PMMA		
Holder Material	-		
Fastening	Screw, pin, tape		
Status	Ready		

NOTE: The typical divergence will be changed by different color, chip size and chip position tolerance. The typical total divergence is the full angle measured where the luminous intensity is half of the peak value.

Ledil Oy
Salorankatu 10
24240 SALO
Finland

http://www.ledil.com
email: ledil@ledil.com
FAX: +358-2-733 8001

GENERAL INFORMATION

- Product series especially designed & optimized for LUXEON A series of LEDs.
- Special care taken to make light distribution as uniform as possible.
- Lens material optical grade PMMA with high UV and temperature resistance. Allows use of high current and temperature conditions.

Please find more information about used material from below:
http://ledil.fi/sites/default/files/Documents/Technical/Material/PMMA%208N%20UL94_Yellow%20Card.pdf
http://ledil.fi/sites/default/files/Documents/Technical/Material/PMMA%208N%20PLEXIGLAS-Datasheet.pdf

Ledil Oy
Salorankatu 10
24240 SALO
Finland

http://www.ledil.com
email: ledil@ledil.com
FAX: +358-2-733 8001

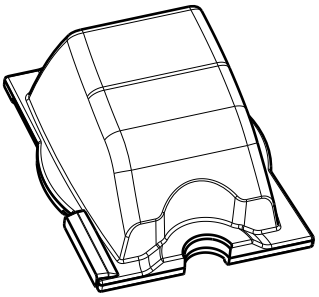

Isometric view

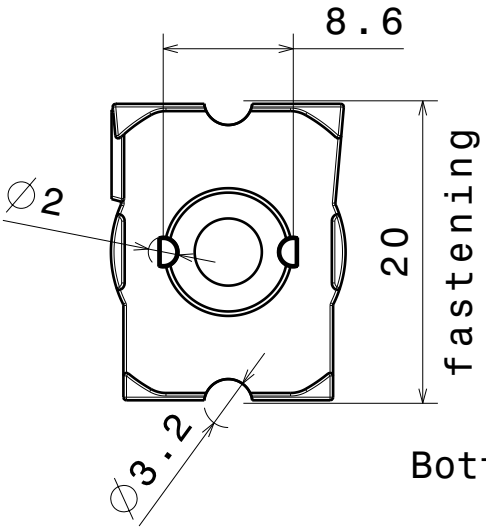

Bottom view

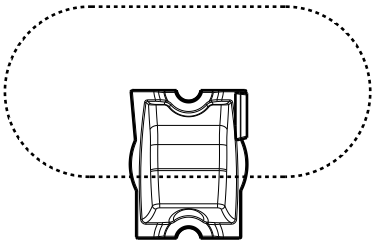

Beam direction

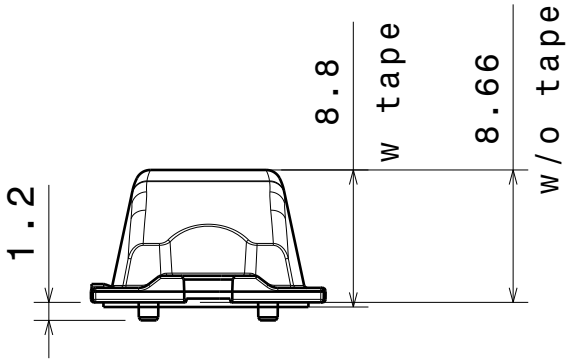

Front view

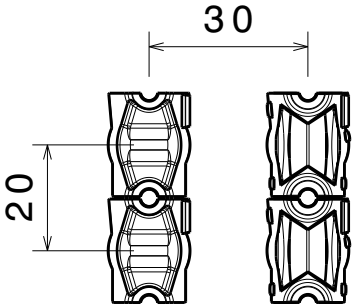

Strada lens arrangement recomendation

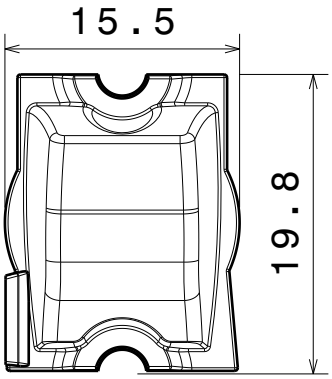

Top view

MATERIALS
Lens: PMMA
Tape(optional): PU Foam

Optical interface details are confidential and detail in this area may not reflect actual shape

This drawing is our property. It can't be reproduced or communicated without our written agreement.

Ledil Oy
Salorankatu 10
FIN-24100 SALO
Finland

DRAWN BY ah	DATE 26.9.2012	DRAWING TITLE Datasheet Strada-T-DN Lens		
CHECKED BY sn	DATE 26.9.2012	SIZE A4	DRAWING NUMBER	REV 2
DESIGNED BY hh	DATE 14.05.2010	SCALE 2:1	WEIGHT(g)	SHEET 1/1