THIS DRAWING IS UNPUBLISHED. RELEASED FOR PUBLICATION -,- .
© COPYRIGHT - By - ALL RIGHTS RESERVED.

LOC	DIST
1	—

REVISIONS

P	LTR	DESCRIPTION	DATE	DWN	APVD
	BD2	REVISED PER ECO-11-005301	02MAR11	RK	HMR

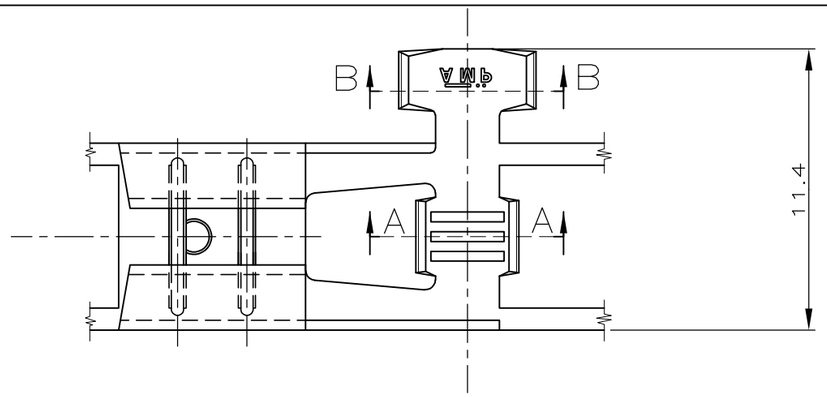

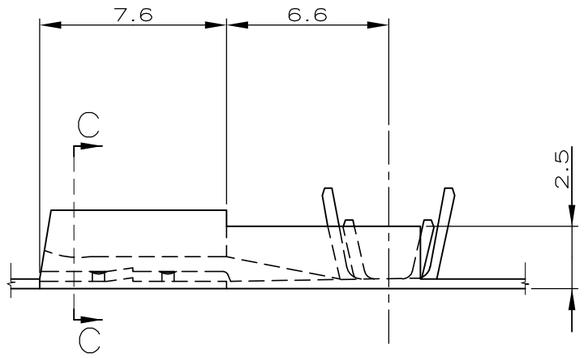

SECTION A–A

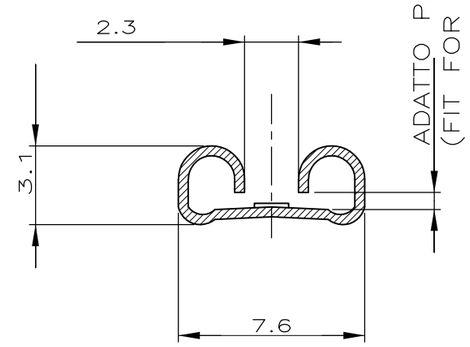

SECTION C–C

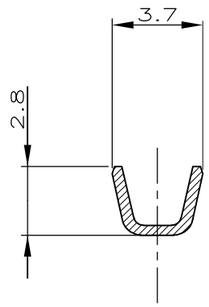

SECTION A–A

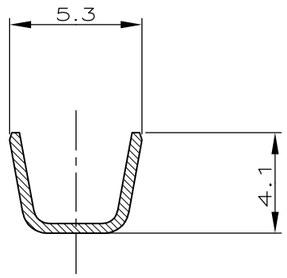

SECTION B–B

1. NON DISPONIBILE DALL' AMP ITALIA (NOT AVAILABLE FROM AMP ITALY)
2. ADATTO PER AMP–O–MATOR (REVERSE REELED FOR MINI APPLICATOR)
3. BOBINA IN CARTONE CON CARTA INTERPOSTA QUANTITA' PER BOBINA: 3000 (CARTON REEL WITH INTERPOSED PAPER STRIP Q.TY PER REEL: 3000)
4. CON SPECIALE RIVESTIMENTO IN CARTA (WITH SPECIAL PAPER COVER)
5. BOBINA IN CARTONE CON CARTA INTERPOSTA QUANTITA' PER BOBINA: 2500 (CARTON REEL WITH INTERPOSED PAPER STRIP Q.TY PER REEL: 2500)
6. OBSOLETE
7. BOBINA IN CARTONE QUANTITA' PER BOBINA: 7000 (CARTON REEL Q.TY PER REEL: 7000)
8. OBSOLETE PARTS: OBSOLETE CIS STREAMLINING PER D.RENAUD/D.SINISI

	NOTE	FINITURA (FINISH)	MATERIALE (MATERIAL)	NUMERO (P/N)	REV
OBSOLETE	2 1 7 6	ST. (TIN PLTD)	BR. F. (PH. BR.)	~~4-280050-7~~	BC
	2 1 7	– (UNPLTD)	BR. F. (PH. BR.)	4-280050-4	BC
	2 1 7	ST. (TIN PLTD)	OTTONE (BRASS)	4-280050-2	BC
	2 1 7	– (UNPLTD)	OTTONE (BRASS)	4-280050-1	BC
	8 2 4	– (UNPLTD)	BR. F. (PH. BR.)	~~2-280050-4~~	BB
	8 2 1 3	NICKELATO (NICKEL PLTD)	ACCIAIO (STEEL)	~~2-280050-3~~	BB
OBSOLETE	2 1 4 6	ST. (TIN PLTD)	OTTONE (BRASS)	~~2-280050-2~~	BB
	2 1 4 3	– (UNPLTD)	OTTONE (BRASS)	2-280050-1	BB
	2 1	NICKELATO (NICKEL PLTD)	ACCIAIO (STEEL)	1-280050-3	BB
	2 5	ST. (TIN PLTD)	OTTONE (BRASS)	1-280050-2	BB
	2 1	ST. (TIN PLTD)	BR. F. (PH. BR.)	280050-7	BB
	2 1	– (UNPLTD)	BR. F. (PH. BR.)	280050-4	BB
	2 1	NICKELATO (NICKEL PLTD)	ACCIAIO (STEEL)	280050-3	BB
	2	ST. (TIN PLTD)	OTTONE (BRASS)	280050-2	BB
	2 1	– (UNPLTD)	OTTONE (BRASS)	280050-1	BB
		ST. (TIN PLTD)	BR. F. (PH. BR.)	180388-5	BB
		ST. (TIN PLTD)	OTTONE (BRASS)	180388-2	BB
		– (UNPLTD)	OTTONE (BRASS)	180388-1	BB

DIAM. ISOLANTE (INS. DIA. RANGE)	RANGO FILO (WIRE RANGE)	
2.3–3.3	0.5–1.5	METRIC

THIS DRAWING IS A CONTROLLED DOCUMENT.

DIMENSIONS: mm [INCHES]

TOLERANCES UNLESS OTHERWISE SPECIFIED:
0 PLC ± –
1 PLC ± 0.3
2 PLC ± –
3 PLC ± –
4 PLC ± –
ANGLES ± 2°

MATERIAL –
FINISH –

DWN A. FROLA 28 APR 97
CHK G. TURCO 29 APR. 97
APVD –
PRODUCT SPEC –
APPLICATION SPEC –
WEIGHT –

TE Connectivity

NAME .250 SERIES FLAG FASTON REC.

SIZE	CAGE CODE	DRAWING NO	RESTRICTED TO
A3	00779	C-180388	–

CUSTOMER DRAWING | SCALE NTS | SHEET 1 OF 1 | REV BD2

1470-19 (3/11)