THIS DRAWING IS UNPUBLISHED. RELEASED FOR PUBLICATION - .- .
© COPYRIGHT - BY TYCO ELECTRONICS CORPORATION. ALL RIGHTS RESERVED.

LOC	DIST
GP	00

REVISIONS

P	LTR	DESCRIPTION	DATE	DWN	APVD
	A	REVISED PER EC 0S13-0287-05	14FEB06	JG	SS
	A1	REVISED PER ECO-09-024927	10NOV09	KK	AEG

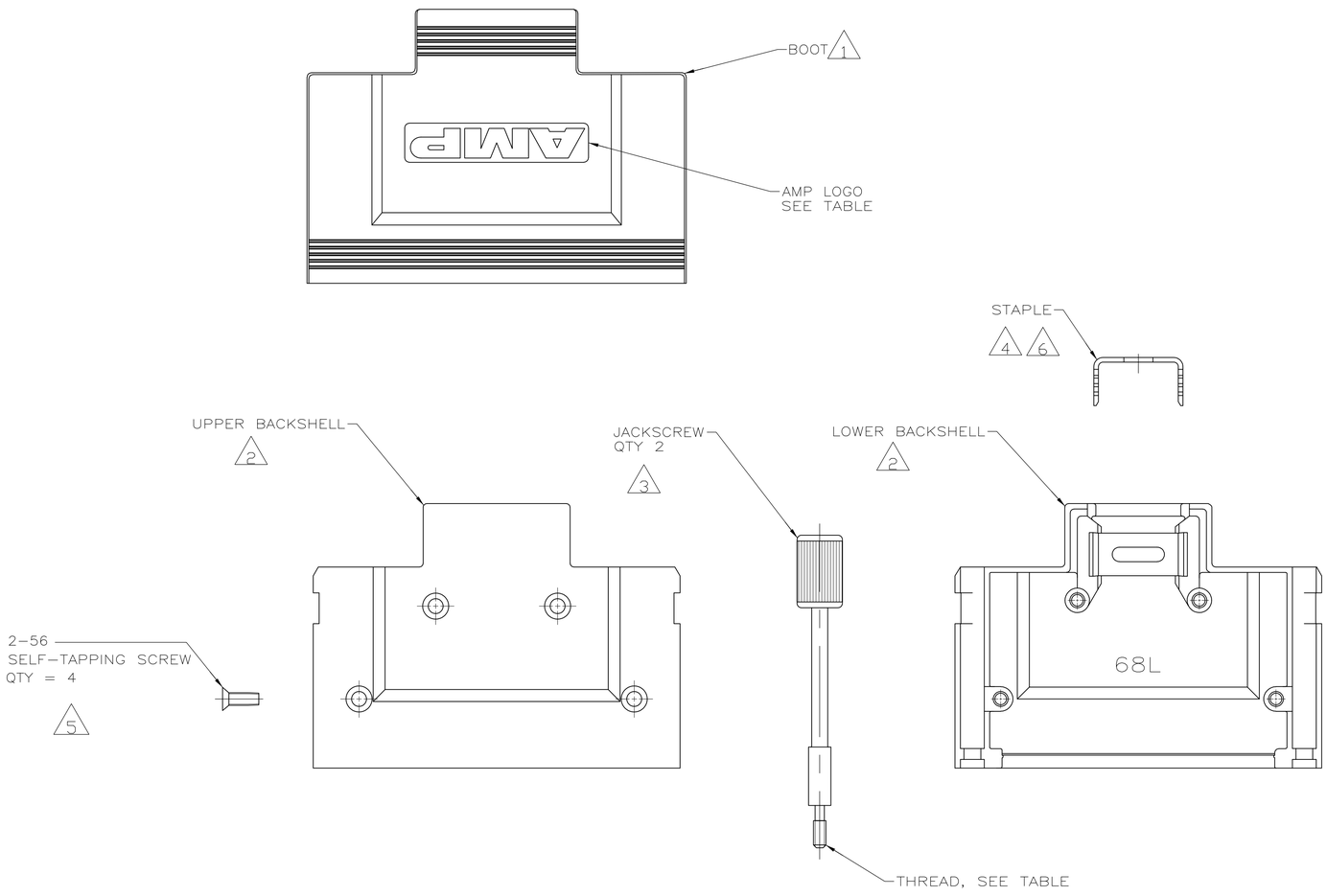

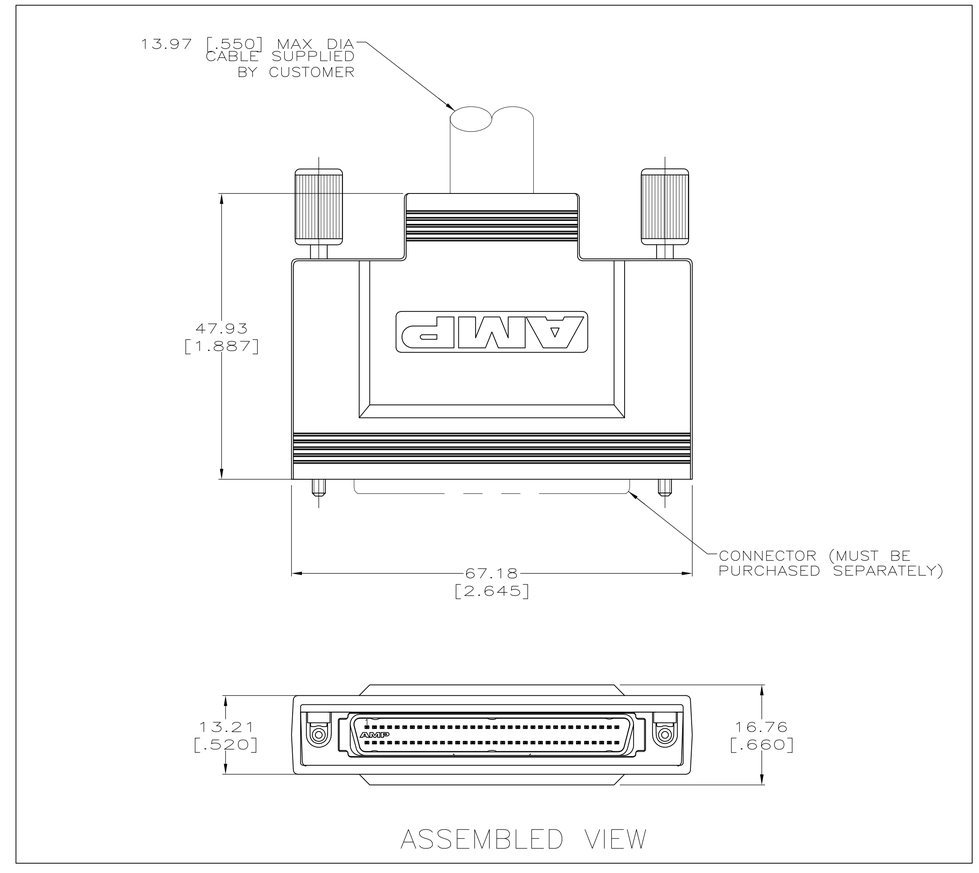

1. PVC, BLACK.
2. ZINC.
3. STAINLESS STEEL & PVC, BLACK.
4. CARBON STEEL.
5. STAINLESS STEEL.
6. 1.27μm [.000050] MIN BRIGHT TIN OVER 1.27μm [.000050] MIN NICKEL.
7. PARTS PACKAGED AS A UNIT KIT.
8. PARTS INDIVIDUAL BULK PACKAGED.
9. OBSOLETE PARTS: OBSOLETE CIS STREAMLINING PER D.RENAUD/D.SINISI

OBSOLETE 9	AMP LOGO	BOOT	JACKSCREW THREAD	PART NUMBER
NO	YES	2-56	7 ~~5750752-5~~	
YES	YES	2-56	8 ~~5750752-4~~	
NO	NO	2-56	7 5750752-3	
YES	YES	4-40	7 5750752-2	
YES	YES	2-56	7 5750752-1	

THIS DRAWING IS A CONTROLLED DOCUMENT.

DIMENSIONS: mm [INCHES]

TOLERANCES UNLESS OTHERWISE SPECIFIED:
0 PLC ± -
1 PLC ± -
2 PLC ± .51[.020]
3 PLC ± -
4 PLC ± -
ANGLES ± -

MATERIAL -
FINISH -

DWN G.PETERS 26AUG05
CHK S.SHUEY 26AUG05
APVD M.WALMSLEY 26AUG05
PRODUCT SPEC —
APPLICATION SPEC —
WEIGHT —

Tyco Electronics
Tyco Electronics Corporation
Harrisburg, PA 17105-3608

NAME
BACKSHELL KIT, UNASSEMBLED,
68 POSN, AMPLIMITE .050 Series
—

SIZE	CAGE CODE	DRAWING NO	RESTRICTED TO
A1	00779	C-5750752	—

CUSTOMER DRAWING
SCALE 1:1 SHEET 1 OF 1 REV A1

COPYRIGHT 2005
TYCO ELECTRONICS CORP
ALL RIGHTS RESERVED