BES 08,0-KH-2S
Order code: BAM00AH

Mounting clamp

BALLUFF
sensors worldwide

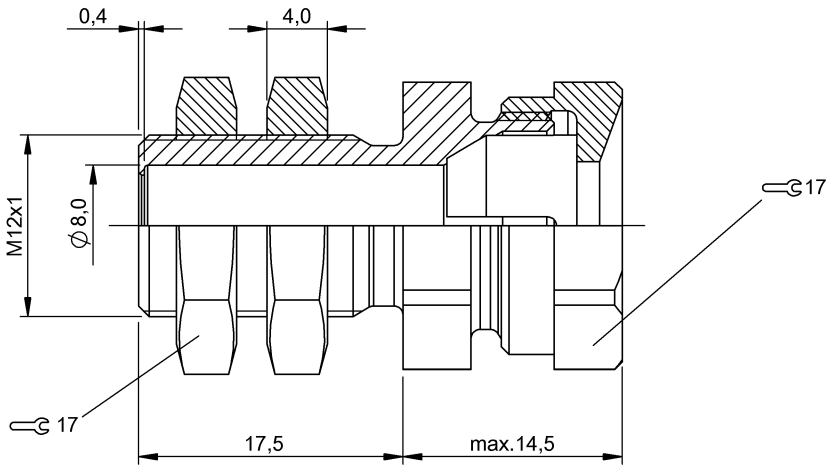

Basic data

Application	Use with sensors Ø8 mm and M8
Scope of delivery	Clamp holder (1x) Nut DIN 1763 M12x1 (2x)

Mechanical data

Dimensions	17.0 mm x 32.0 mm
Mounting type	screwing/clamping
Tightening torque	15 Nm
Tightening torque for clamping	1.0 Nm
Material	CuZn
Surface protection	Nickel-plated

Remarks

The fixed stop may alter the switching distance of the proximity switch.
The proximity switch is inserted into the clamp holder up to the fixed stop and secured using a pressure screw.
For proximity switches from fixing length 30 mm

Definitions see general catalog

Subject to change without notice.

000000000000/552165/00000000