THIS DRAWING IS UNPUBLISHED. RELEASED FOR PUBLICATION -,- .
© COPYRIGHT - By - ALL RIGHTS RESERVED.

LOC	DIST
J	—

REVISIONS 変更

P	LTR LT	DESCRIPTION DESRIGCO	DATE DATA	DWN DES	APVD APR
	F5	REVISED PER ECO-11-005140	07APR11	RK	HMR

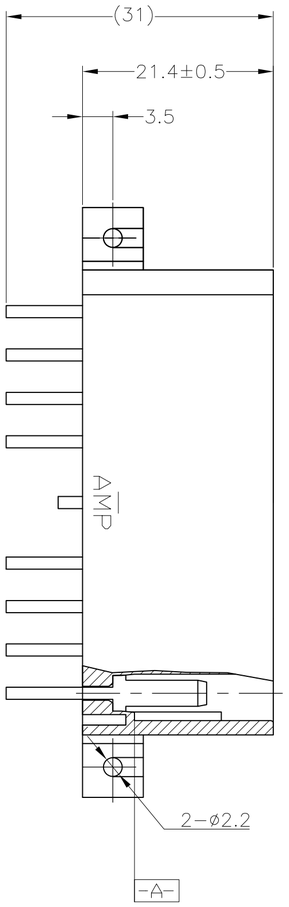

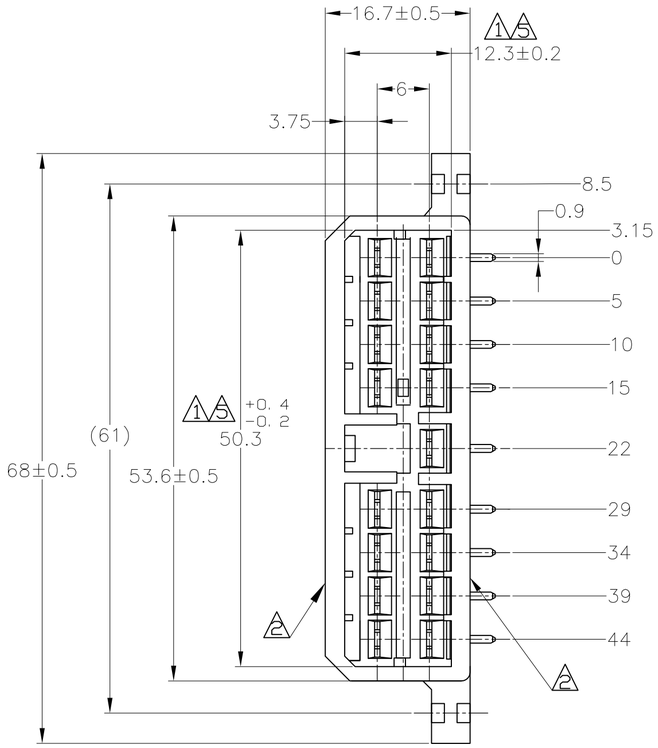

プリント基板取付穴寸法図
(MOUNTING DIMENSIONS FOR P.C.BOARD)

1. 板厚, 1.6±0.15
   (P.C.B. THICKNESS, 1.6±0.15)
2. 公差, ±0.1
   (TORELANCE, ±0.1)

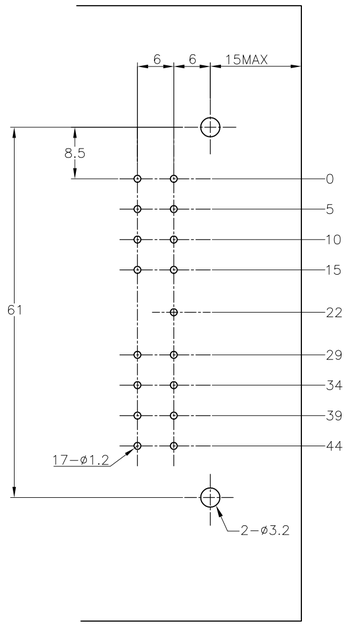

注記：

1. 相手ハウジングと所定の機能を満たしてかん合できること。
2. フードの反りは0.2以内。
3. プリント基板への取付けは JIS B1115 M3 1種の タッピンネジで締め付けた後はんだ付けする。
4. 適用製品規格；108-5093
5. -A- 面より2mmの範囲で測定のこと。
6. 相手ハウジングとのかん合力は、29.4N以下 但し、リセプタクルコンタクトは含まない。

NOTE :

1. IN COUPLING WITH THE PLUG HOUSING MATING SATISFIES FUNCTION
2. WARPAGE 0.2 MAX.
3. SOLDERING AFTER MOUNTING P.C.BOARD BY 3mmDIA TAPPING SCREW, SPECIFIED IN JIS B1115
4. PRODUCT SPEC NO. 108-5093
5. TO BE MEASURED WITHIN 2mm FROM -A-
6. IN COUPLING WITH THE PLUG HOUSING MATING FORCE 29.4N MAX. WITHOUT RECEPTACLE CONTACT

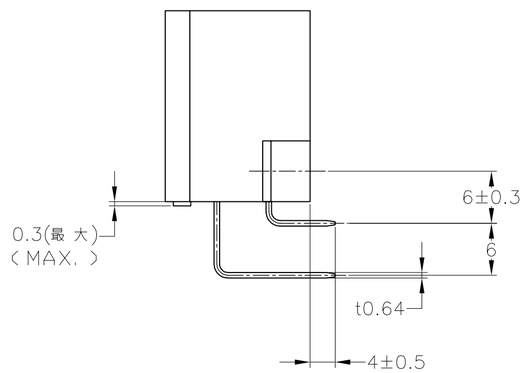

	SOLDERING SIDE 半田付け部	CONTACT SIDE 接触部側	COLOR 色	PART NUMBER 製品型番
	SELECTIVE-TIN (MATTE)	SELECTIVE GOLD (0.38μm MIN.)	NATURAL	2-5171366-1
	SELECTIVE-TIN (MATTE)	SELECTIVE GOLD (0.76μm MIN.)	NATURAL	1-5171366-1
OBSOLETE	TIN-LEAD	SELECTIVE GOLD (0.38μm MIN.)	YELLOW	2-171366-7
	TIN-LEAD	SELECTIVE GOLD (0.38μm MIN.)	GREEN	2-171366-4
	TIN-LEAD	SELECTIVE GOLD (0.38μm MIN.)	NATURAL	2-171366-1
OBSOLETE	TIN-LEAD	SELECTIVE GOLD (0.76μm MIN.)	GREEN	1-171366-4
	TIN-LEAD	SELECTIVE GOLD (0.76μm MIN.)	NATURAL	1-171366-1
	PRE-TIN	PRE-TIN BRASS	GRAY	171366-6
OBSOLETE	PRE-TIN		BLUE	171366-5
	PRE-TIN		GREEN	171366-4
	PRE-TIN		BROWN	171366-3
	PRE-TIN		BLACK	171366-2
	PRE-TIN		NATURAL	171366-1
	CONTACT FINISH コンタクト仕上			

171366

THIS DRAWING IS A CONTROLLED DOCUMENT.

DIMENSIONS: 単位：は mm

TOLERANCES UNLESS OTHERWISE SPECIFIED: 一般公差
0 PLC/DEC ± -
1 PLC/DEC ± -
2 PLC/DEC ± -
3 PLC/DEC ± -
4 PLC/DEC ± -
ANGLES/ANGULARES ± -

TOLERANCE UNLESS OTHERWISE SPECIFIED: 一般公差
0<xx≦ 10 : ±0.2
10<xx≦ 30 : ±0.25
30<xx≦100 : ±0.3
ANGLE : 角度 ±3°

MATERIAL 材料: HSG: 66 NYLON CONTACT: BRASS

FINISH 仕上: -

DWN/DES T.SHINOHARA 31AUG07
CHK/CH K.BETSUI 31AUG07
APVD/APR K.BETSUI 31AUG07
PRODUCT SPEC 製品規格: SEE NOTE 4
APPLICATION SPEC 取付適用規格: —
WEIGHT: —

TE Connectivity

NAME 名称: 17P HORIZONTAL TYPE CAP HOUSING MULTI-INTERLOCK CONN. WIRE TO PCB

SIZE	CAGE CODE	DRAWING NO 番号	RESTRICTED TO
A2	00779	C-171366	—

CUSTOMER DRAWING/DESENHO DE CLIENTE | SCALE 尺度 2:1 | SHEET FOLHA 1 OF 1 | REV F5