DO NOT SCALE
DIMENSIONS IN mm

METRIC

THIRD ANGLE PROJECTION

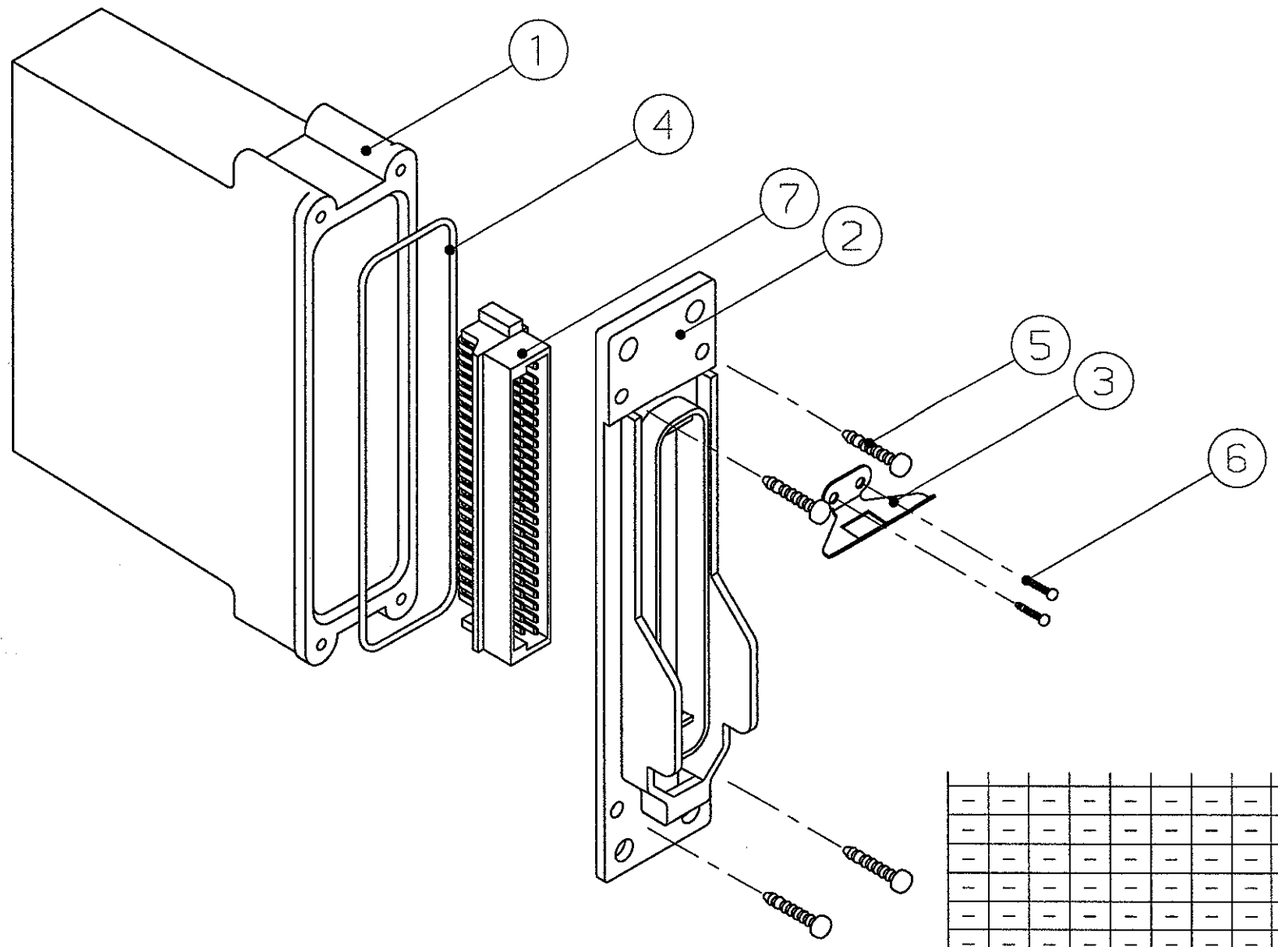

–	–	–	–	–	–	–	–	–	–	–	–	–
–	–	–	–	–	–	–	–	–	–	0-825213-1	35 POS. TIMER HEADER	7
–	–	–	–	–	–	–	–	2	–	0-188221-3	M3x4,5	6
–	–	–	–	–	–	–	–	6	–	0-188221-2	M4x16	5
–	–	–	–	–	–	–	–	1	–	0-188221-4	O-RING 91,7X1,78 NBR 50	4
–	–	–	–	–	–	–	–	1	A3	0-188163-1	LOCKING CLIP	3
–	–	–	–	–	–	–	–	1	A2	0-188690-1	TIMERBOX COVER	2
–	–	–	–	–	–	–	–	1	A2	0-188689-1	TIMERBOX	1
									DWG. SIZE	PART No.	DESCRIPTION	ITEM No.
1	1	1	1	1	1	1	1	0-188691-1				

QTY. REQD. PER ASSY.

← REVISION OF EACH ASSY. No. (WHEN BLANK, USE DWG. REV.)

PART LIST

LTR.	REVISION RECORD	DR.	CHK.	DATE
–	–	–	–	–
–	–	–	–	–
–	–	–	–	–
–	–	–	–	–
–	–	–	–	–
A	EH00-0799-01	RvH	MvD	12 JUL 01
0	EH-0744-95	DK	KK	15 JUN 95

CUSTOMER DRAWING — FOR REFERENCE ONLY WILL NOT BE UPDATED

© COPYRIGHT 19- BY AMP HOLLAND B.V.
ALL INTERNATIONAL RIGHTS RESERVED. AMP PRODUCTS MAY BE COVERED BY U.S. AND FOREIGN AND/OR PATENTS PENDING.

THIS DRAWING IS UNPUBLISHED
~~RELEASED FOR PUBLICATION ,19~~

AMP — AMP HOLLAND B.V. 's-Hertogenbosch, The Netherlands.

NAME: ASS'Y TIMERBOX

DR.: D.KESSLER	CHK.: MvDRIEL	APP.: MvDRIEL	DWG.No.	REV.LTR.	SHEET	
DATE: 15 JUN 95	DATE: 12 JULY 01	DATE: 12 JULY 01	188691	A	1 OF 1	A3

R6-128 (REV.04-91)