RS stock numbers: 289-1319, 338-9700, 338-9716, 339-730, 725-9830, 725-9831, 726-9833, 725-9836, 725-9849, 756-4255, 845-976, 869-7560, 869-7654, 869-7573, 869-7576

RSF40 Series

Compact Internal fitting

- ***Compact design***
- ***Flying Lead or M12 plug connection***
- ***Available in Nylon, Polypropylene or PPS***
- ***25VA & 100VAversions***
- ***Many variants are UL recognised components File No. E171218***
- ***WRAS Approved versions available***

Technical Specification		RSF43	RSF44	RSF48	RSF46
Material		Nylon	Polypropylene WRAS approved	Polypropylene UL approved	Polyphenylene Sulphide (PPS)
Colour		Black	Opaque	White	Grey
Temp. Range	°C	-20 / +75	-20 / +100	-20 / +100	-10 / +120 *
	°F	-4 ./ +167	-4 / +212	-4 / +212	+14 / +248 *
Min. Fluid SG		0.85	0.85	0.8	0.85
Must close level (SG=1)		7mm	8mm	8mm	9mm
Must open level (SG=1)		20mm	20mm	20mm	24mm

* Maximum temperature requires ETFE cable to be specified.

The RSF40 series is designed as a compact internal fitting device, with a wide range of options, making this ideal for size sensitive applications. Mounting of this series requires access to the inside of the tank.

Typical applications include vending machines, commercial washing machines and evaporator units.

They are manufactured in a variety of materials with a choice of gasket materials, to suit most commonly used liquids.

The switch action may be reversed by rotating the device through 180º.

Available with flying leads or M12 socket for electrical connection. Cable sets with M12 plugs are also available.

Custom versions can be made for particular applications..

Electrical Specification		25W (Y code)	100W (H code)
Contact Form		N/O (N/C)	N/O (N/C)
Switching Power Max	VA	25	100
Switching Voltage AC Max	V	240	300
Switching Voltage DC Max	V	120	300
Switching Current Max	A	0.6	1

All ratings are for resistive load only.

RS Code	Standard Parts	Material	Max Power	Leadouts	Gasket	Approvals
725-9833	RSF43H100RF	Nylon	100VA	100cm PVC 16/0.2	Nitrile	WRAS
339-730	RSF43Y050QF	Nylon	25VA	50cm PVC 24/0.2	Silicone	WRAS
338-9700	RSF43Y100RF	Nylon	25VA	100cm PVC 16/0.2	Nitrile	WRAS
725-9836	RSF44H100RF	PP	100VA	100cm PVC 16/0.2	Nitrile	WRAS
845-976	RSF44Y050QF	PP	25VA	50cm PVC 24/0.2	Silicone	WRAS
725-9830	RSF46H050TG	PPS	100VA	50cm ETFE 19/0.2	Viton	WRAS & UL
725-9849	RSF46H100RF	PPS	25VA	100cm PVC 16/0.2	Nitrile	WRAS & UL
289-1319	RSF46Y050TG	PPS	25VA	50cm ETFE 19/0.2	Viton + Silicone	WRAS & UL
338-9716	RSF46Y100RG	PPS	25VA	100cm PVC 16/0.2	Viton + Silicone	WRAS & UL
756-4255	RSF48H100RF	PP (UL)	100VA	100cm PVC 16/0.2	Nitrile	UL
725-9931	RSF48Y100RF	PP (UL)	25VA	100cm PVC 16/0.2	Nitrile	UL
	RSF43HFP	Nylon	100VA	M12 connector	Nitrile	WRAS
869-7560	RSF43YFP	Nylon	25VA	M12 connector	Nitrile	WRAS
	RSF44HFP	PP	100VA	M12 connector	Nitrile	WRAS
869-7654	RSF44YFP	PP	25VA	M12 connector	Nitrile	WRAS
	RSF46HFP	PPS	100VA	M12 connector	Nitrile	WRAS & UL
869-7573	RSF46YFP	PPS	25VA	M12 connector	Nitrile	WRAS & UL
	RSF48HFP	PP (UL)	100VA	M12 connector	Nitrile	UL
869-7576	RSF48YFP	PP (UL)	25VA	M12 connector	Nitrile	UL

Mechanical Dimensions

All dimensions are in millimeters (inches)

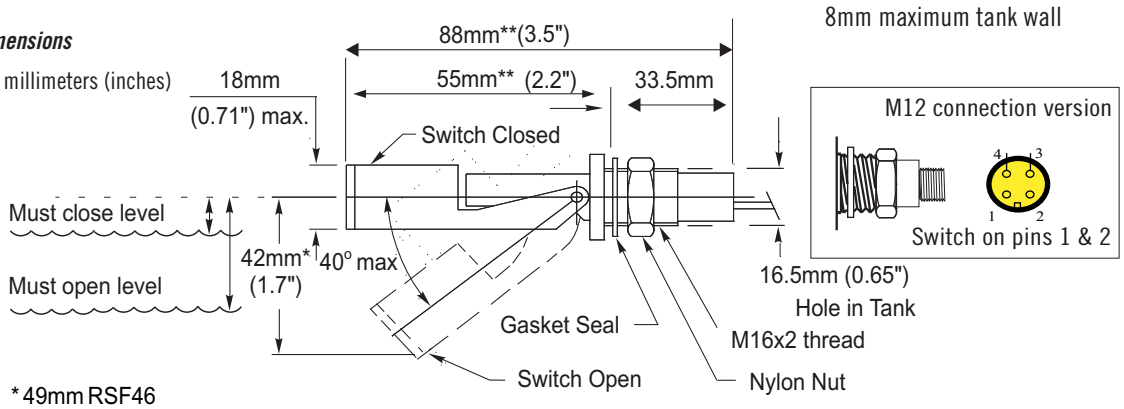

Cynergy3 Components Ltd.
7 Cobham Road
Ferndown Industrial Estate
Wimborne, Dorset BH21 7PE
Telephone +44 (0) 1202 897969

Email:sales@cynergy3.com

* 49mm RSF46
** Add 10mm to dims, RSF46

ISO9001CERTIFIED

www.cynergy3.com

© 2015 Cynergy3 Components, All Rights Reserved. Specifications are subject to change without prior notice. Cynergy3 Components and the Cynergy3 Components logo are trademarks of Cynergy3 Components Limited.