PicoLog 1000 Series

User's Guide

pl1000.en-1

Copyright © 2009 Pico Technology Ltd. All rights reserved.

Contents

1 Introduction 1

1 Overview 1
2 Safety warning 2
3 Legal information 3
4 Accessories 4
5 Company details 4
6 Connecting the logger 5
7 Getting started 5
8 Example circuit (voltage) 6
9 Example circuit (light) 7

2 Product information 8

1 Specifications 8
2 I/O connector pins 9
3 USB ADC-11 compatibility mode 10

3 Glossary 11

Index 13

Copyright © 2009 Pico Technology Ltd. All rights reserved.

1 Introduction

1.1 Overview

The PicoLog 1000 Series PC Data Loggers are medium-speed, multichannel voltage-input devices for sampling analog data using a PC. This manual describes the physical properties of the loggers.

The following PicoLog 1000 Series Data Loggers are available:

Version	Resolution	Channels
PicoLog 1012	10 bits	12
PicoLog 1216	12 bits	16

These devices are designed for use with the PicoLog data logging software and the PicoScope oscilloscope software. You can also use the PicoLog API supplied to develop your own programs to collect and analyse data. See the PicoLog 1000 Series Programmer's Guide for details of the API.

Copyright © 2009 Pico Technology Ltd. All rights reserved.

1.2 Safety warning

We strongly recommend that you read the general safety information below before using your product for the first time. If the equipment is not used in the manner specified, then the protection provided may be impaired. This could result in damage to your computer and injury to yourself or others.

Maximum input range

The inputs of the PicoLog 1000 Series loggers are protected against overvoltages up to ±30 V. Input voltages beyond this range may cause permanent damage to the unit.

Mains voltages

Pico products are not designed for use with mains voltages. To measure mains we recommend the use of a differential isolating probe specifically designed for such measurements.

Safety grounding

The ground of every unit is connected directly to the ground of your computer via the interconnecting cable provided. This is done to minimise interference. If the PC (especially laptops) is not grounded, reading stability cannot be guaranteed and it may be necessary to manually ground the equipment.

As with most oscilloscopes and data loggers, you should take care to avoid connecting the inputs of the unit to any equipment which may be at an unsuitable voltage. If in doubt, use a voltmeter to check that there is no hazardous AC or DC voltage. Failure to check may cause damage to the product and/or computer and could cause injury to yourself or others.

You should assume that the product does not have a protective safety earth. Incorrect configuration and/or use on voltages outside the maximum input range can be hazardous.

Cleaning

The unit may be cleaned externally using a cloth dampened slightly with water. Do not use any other solvents or abrasive cleaning materials.

Repairs

The unit contains no user-serviceable parts. Repair or calibration of the unit requires specialised test equipment and may be performed only by Pico Technology or its authorised distributors.

Copyright © 2009 Pico Technology Ltd. All rights reserved.

1.3 Legal information

The material contained in this release is licensed, not sold. Pico Technology grants a licence to the person who installs this software, subject to the conditions listed below.

Access

The licensee agrees to allow access to this software only to persons who have been informed of these conditions and agree to abide by them.

Usage

The software in this release is for use only with Pico products or with data collected using Pico products.

Copyright

Pico Technology claims the copyright of, and retains the rights to, all material (software, documents etc.) contained in this release. You may copy and distribute the entire release in its original state, but must not copy individual items within the release other than for backup purposes.

Liability

Pico Technology and its agents shall not be liable for any loss, damage or injury, howsoever caused, related to the use of Pico Technology equipment or software, unless excluded by statute.

Fitness for purpose

No two applications are the same: Pico Technology cannot guarantee that its equipment or software is suitable for a given application. It is your responsibility, therefore, to ensure that the product is suitable for your application.

Mission-critical applications

This software is intended for use on a computer that may be running other software products. For this reason, one of the conditions of the licence is that it excludes usage in mission-critical applications, for example life support systems.

Viruses

This software was continuously monitored for viruses during production, but you are responsible for virus-checking the software once it is installed.

Support

If you are dissatisfied with the performance of this software, please contact our technical support staff, who will try to fix the problem within a reasonable time scale. If you are still dissatisfied, please return the product and software to your supplier within 28 days of purchase for a full refund.

Upgrades

We provide upgrades, free of charge, from our web site. We reserve the right to charge for updates or replacements sent out on physical media.

Trademarks

Pico Technology, PicoScope and PicoLog are trademarks of Pico Technology Ltd., registered in the United Kingdom and other countries. Pico Technology acknowledges the following product names as trademarks of their respective owners: Windows, Excel, Visual Basic, LabVIEW, Agilent VEE, HP VEE, Delphi.

Copyright © 2009 Pico Technology Ltd. All rights reserved.

1.4 Accessories

The following items are supplied in all packages:

Standard items	Part no.
PicoLog 1000 Series PC Data Logger	PP543 (PicoLog 1012) PP544 (PicoLog 1216)
USB cable	MI106
Software and Reference CD-ROM	DI025
USB Installation Guide	DO112

The following additional items are supplied in some packages (see our website for details):

Additional items	Part no.
Small Terminal Board	PP545
Small Terminal Board User's Guide	DO161

The Small Terminal Board makes connecting wires to the Data Logger much easier. Instead of soldering wires to a 25-way D-type plug, you can simply insert prepared wire ends into the screw terminals on the terminal board. The board also contains solder pads to allow you to fit resistors that divide the input voltage to each channel by a known ratio, thereby expanding the measuring range by the same ratio. For example, if you divide the input voltage by 4, then the effective input range of the Data Logger is increased from 2.5 V to 10 V on that channel.

1.5 Company details

Address: Pico Technology
James House
Colmworth Business Park
ST. NEOTS
Cambridgeshire
PE19 8YP
United Kingdom

Phone: +44 (0) 1480 396 395
Fax: +44 (0) 1480 396 296

Email:
Technical Support support@picotech.com
Sales sales@picotech.com

Web site: www.picotech.com

 Copyright © 2009 Pico Technology Ltd. All rights reserved.

1.6 Connecting the logger

Before you connect your logger, you must install the software supplied on the CD.

To connect the PicoLog logger, plug the cable provided into any available USB port on your PC.

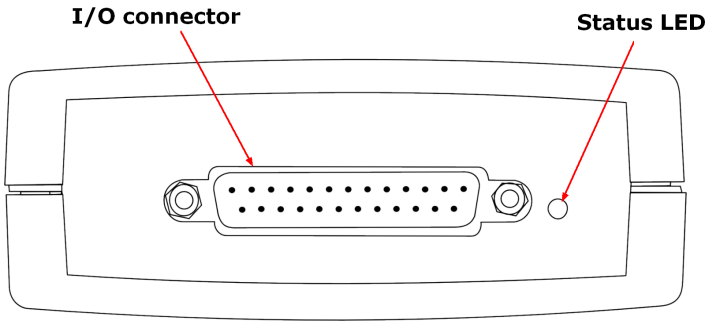

I/O connector: for the pin-numbering of the I/O connector, see I/O connector pins 9. The Pico PP545 Small Terminal Board is specially designed to connect to this socket to allow you to make connections to individual wires easily without soldering. If you need to use a ribbon cable to connect your signals to this socket, use the shortest possible length to avoid introducing too much crosstalk between the signals.

Status LED: this flashes while the device is capturing data. The flash rate depends on the sampling rate.

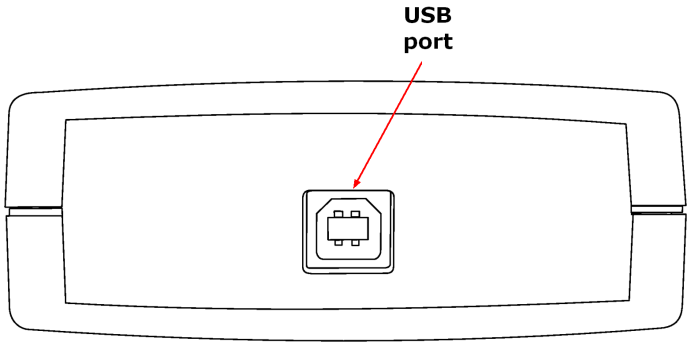

USB port: use the USB cable supplied to connect this to the PC that is running the Pico software. A PC with a USB 2.0 port is recommended for best performance.

1.7 Getting started

To check that the unit is working, start the PicoScope program by clicking the PicoScope icon on your desktop:

You should immediately see a signal trace on the screen. As the inputs are high-impedance, the trace will show noise until a defined voltage is applied to the input. If you connect a wire from the PO output of the data logger to the C1 analog input (see I/O connector pins 9), you should see the signal jump to +2.5 V.

Copyright © 2009 Pico Technology Ltd. All rights reserved.

1.8 Example circuit (voltage)

This is how to connect a simple voltage source to the Data Logger:

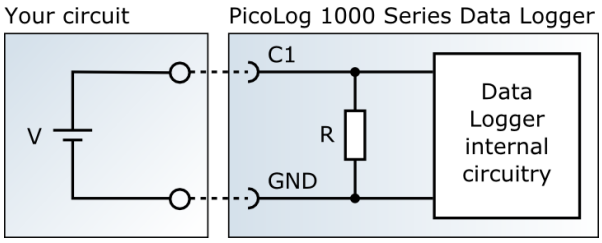

The components of the circuit are as follows:

V	Battery	Any cell, battery or transducer with a voltage output in the range 0 V to +2.5 V.
R	1 MΩ	The input resistance of the PicoLog Data Logger. You do not have access to this resistor, but you may need to know its value when designing your circuit.
C1	Channel 1	The C1 pin on the Data Logger. If you are using the Pico Small Terminal Board, use the screw terminal marked **C1**.
GND	Ground	The GND pin on the data logger. If you are using the Pico Small Terminal Board, use any of the screw terminals marked **GND**.

Once you have built the circuit, connect it to the Data Logger, run the PicoScope 6 software and watch the trace on the display. When the voltage source is connected, the trace should rise to the level of the source voltage. When the voltage source is disconnected, the trace should fall to zero volts.

Copyright © 2009 Pico Technology Ltd. All rights reserved.

1.9 Example circuit (light)

Here is an example of a sensor circuit that you could connect to the logger.

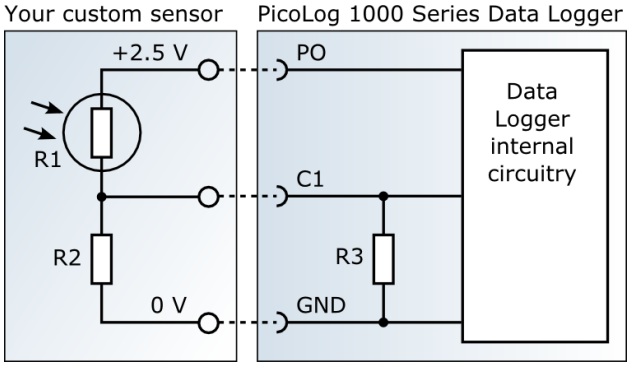

The components of the circuit are as follows:

R_1	ORP12	A light-dependent resistor of type ORP12 or similar. In the dark this acts like a fixed resistor with a high value of 1 MΩ or more, but when exposed to light its resistance drops in proportion to the brightness of the light, down to several kΩ.
R_2	100 kΩ	A fixed resistor to limit the current through R_1.
R_3	1 MΩ	The input resistance of the PicoLog Data Logger. You do not have access to this resistor, but you may need to know its value when designing your circuit.
C_1	Channel 1	The C1 pin on the data logger. If you are using the Pico Small Terminal Board, use the screw terminal marked **C1**.
PO	+2.5 V	The power output pin on the data logger. If you are using the Pico Small Terminal Board, use the screw terminal marked **2.5**.
GND	Ground	The GND pin on the data logger. If you are using the Pico Small Terminal Board, use any of the screw terminals marked **GND**.

Once you have built the circuit, connect it to the Data Logger, run the PicoScope 6 software and watch the trace on the display. When the sensor is exposed to light, the trace should rise to almost 2.5 V. When the sensor is covered, the trace should fall to a value close to 0 V.

Copyright © 2009 Pico Technology Ltd. All rights reserved.

2 Product information

2.1 Specifications

	PicoLog 1012	PicoLog 1216
Maximum sampling rate 11 **continuous streaming** **block mode** [1]	100 kS/s single-channel 1 MS/s single-channel	
Buffer size	8k samples, shared by all channels	
Analog inputs	12 [2]	16 [2]
analog bandwidth 11 **(-3 dB)**	DC to 70 kHz	
input type	Single-ended, unipolar	
input voltage range	0 to +2.5 V	
linearity 11 **(at 25 °C)**	1 LSB	
resolution 11	10 bits	12 bits
accuracy 11	1%	0.5%
overload protection 11	±30 V to ground	
input coupling	DC	
input impedance 11	1 MΩ	
Digital outputs (D0...D3)	2	4 [2]
Digital outputs (PWM 11**)**	None	1
period **duty cycle** 11	100 µs to 1800 µs adjustable from 0% to 100% in 1% steps	
Digital outputs (all) **logic low voltage** **logic high voltage** **current limiting**	100 mV (typical) 3.3 V 1 kΩ resistors in series with outputs	
Power output for sensors	2.5 V @ 10 mA, current-limited	
Ground fault current protection	0.9 A thermal self-resetting fuse	
I/O connector	25-way D female	
Environmental operating conditions **for quoted accuracy** **general operation** **relative humidity**	20°C to 50°C for quoted accuracy 0°C to 70°C overall 5% to 80% RH	
Compliance	CE (EMC) class A emissions & immunity FCC emissions	
PC connection	USB 2.0 11	
Dimensions	45 mm x 100 mm x 140 mm (1.77" x 3.94" x 5.51")	
Weight	< 200 g (7.05 oz)	

Notes:
1. Block mode is supported by PicoScope and the PicoLog 1000 Series API, but not by PicoLog.
2. Except in USB ADC-11 compatibility mode 10 (see I/O connections table 9)

Copyright © 2009 Pico Technology Ltd. All rights reserved.

2.2 I/O connector pins

The I/O connector is the 25-way connector on the front of the unit. Pin numbers and signal names are as follows. See Specifications 8 for further details of input and output characteristics.

Pin no.	Pin name	Function	Characteristics	PicoLog 1012	PicoLog 1216	ADC-11[1]
Shell	GND	Ground	0.15 A resettable fuse[2]	Y	Y	Y
1	DO1	Digital out	3.3 V	Y	Y	Y
2	GND	Ground	0.9 A resettable fuse[2]	Y	Y	Y
3	C1	Analog in	0 to +2.5 V	Y	Y	Y
4	C2					
5	C3					
6	C4					
7	C5					
8	C6					
9	C7					
10	C8					
11	C9					
12	C10					
13	C11					
14	DO2	Digital out	3.3 V	Y	Y	Y
15	DO4			NC		NC
16	DO3					
17	PO	Power out	2.5 V @ 10 mA	Y	Y	Y
18	PWM	PWM 11 output	3.3 V	NC	Y	NC
19	GND	Ground	0.9 A resettable fuse[2]	Y	Y	
20	GND					
21	C12	Analog in	0 to +2.5 V	Y	Y	
22	C13			NC		
23	C14					
24	C15					
25	C16					

Note 1: These outputs are available when the unit is used in USB ADC-11 compatibility mode 10.

Note 2: The ground pins are protected by resettable fuses. If you connect one of the ground pins to a voltage source such as a power pack, and the voltage source shares a ground connection with the USB cable to the Data Logger, then a large current will flow into the ground pin. The fuse will detect this condition and disconnect the pin before damage is caused to the Data Logger. The fuse will automatically reset itself when the voltage source is disconnected from the input pin.

Note 3: NC = not connected

Copyright © 2009 Pico Technology Ltd. All rights reserved.

The I/O connector pins are numbered as follows:

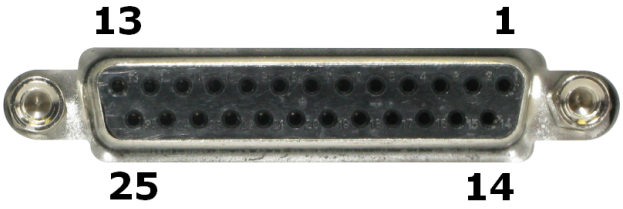

2.3 USB ADC-11 compatibility mode

The PicoLog 1000 Series data loggers may be used as replacements for the USB ADC-11, an 11-channel data logger previously available from Pico Technology. The 1000 Series units have all the functions of the USB ADC-11 and some extra functions, such as extra digital outputs 9, a PWM output 9 and a sensor power output. They also have a faster USB interface and more advanced driver software.

If you use a 1000 Series unit with old versions of PicoScope and PicoLog that were released before April 2009, then it will automatically emulate a USB ADC-11. You can continue to use the unit as an USB ADC-11 if you wish, or you can upgrade your software to enable the extra functions of the new unit.

Copyright © 2009 Pico Technology Ltd. All rights reserved.

3 Glossary

Accuracy. The closeness between measured values and true values. This is more usually expressed as the error, as a percentage of full scale, between the measured value and the true value.

ADC. Analog to Digital Converter. An ADC samples analog signals and converts them to digital data for storage and processing. It is an essential component of a data logger.

Analog bandwidth. The range of input frequencies over which the measured signal power is at least half its true value. This corresponds to a drop in amplitude of about 29%.

Duty cycle. For a square wave signal, the proportion of the time that the signal spends at the high level divided by the period of the signal, expressed as a percentage. Thus, a symmetrical square wave has a duty cycle of 50%.

Input impedance. The impedance of the input channels of the logger with the input disconnected. Impedance is the total opposition (due to resistance, capacitance and inductance) offered to the flow of an alternating current.

Linearity. The ideal output of an ADC is a linear function of its analog input. Linearity is a measure of the worst-case deviation from this ideal characteristic.

Maximum sampling rate. A figure indicating the maximum number of samples the ADC is capable of acquiring per second. Maximum sample rates are usually given in S/s (samples per second.) The higher the sampling rate of the ADC, the more accurately it can represent the high-frequency details in a signal.

Overload protection. The maximum voltage that can be applied across the inputs of the ADC without causing damage to it.

PWM. Pulse-width modulation. A way of conveying analog information by means of a single binary signal. The PWM output from the PicoLog 1000 Series units is a square wave between 0 volts and +3.3 volts, with variable duty cycle. The average voltage of the signal is the peak voltage, 3.3 volts, multiplied by the duty cycle. The signal can be used to control proportional

Resolution. A value, in bits, indicating the number of distinct input levels that the ADC 11 can turn into digital values.

USB. Universal Serial Bus. This is a standard port that enables you to connect external devices to PCs. A typical USB 1.1 port supports a data transfer rate of 12 megabits per second and is much faster than an RS-232 serial port. A full-speed USB 2.0 port operates at up to 480 megabits per second.

Copyright © 2009 Pico Technology Ltd. All rights reserved.

Index

A

Accessories 4
Accuracy 8, 11
ADC 11
ADC-11 compatibility mode 8, 10
Analog bandwidth 11
Analog inputs 8

B

Bandwidth 8
Block mode 8

C

Circuit example 6, 7
Compliance 8
Connections 5
Contact details 4

D

Digital outputs 8
Dimensions 8
Duty cycle 11

E

Environmental conditions 8
Example circuit 6, 7

I

I/O connector 5, 8
Input coupling 8
Input impedance 8, 11
Input range
    expanding 4

L

LDR 7
LED 5
Legal information 3
Linearity 8, 11

M

Maximum sampling rate 11

O

Overload protection 8, 11
Overview 1

P

PC connection 8
PicoScope 5
Power output 8
PWM 11
PWM output 8

R

Resolution 8, 11

S

Safety warning 2
Sampling rate 8
Small Terminal Board 4
Specifications 8
Status LED 5
Streaming mode 8

T

Terminal board 4

U

USB 11
USB ADC-11 compatibility mode 10
USB port 5, 8

V

Voltage input connection 6

W

Weight 8

Copyright © 2009 Pico Technology Ltd. All rights reserved.

Copyright © 2009 Pico Technology Ltd. All rights reserved.

Pico Technology

James House
Colmworth Business Park
ST. NEOTS
Cambridgeshire
PE19 8YP
United Kingdom
Tel: +44 (0) 1480 396 395
Fax: +44 (0) 1480 396 296
www.picotech.com

pl1000.en-1

12.5.09

Copyright © 2009 Pico Technology Ltd. All rights reserved.