SPECIFICATIONS

Model Number: ST24S3H
Part Number: 19032397A Apr. 07, 2016

Mechanical Drawing:

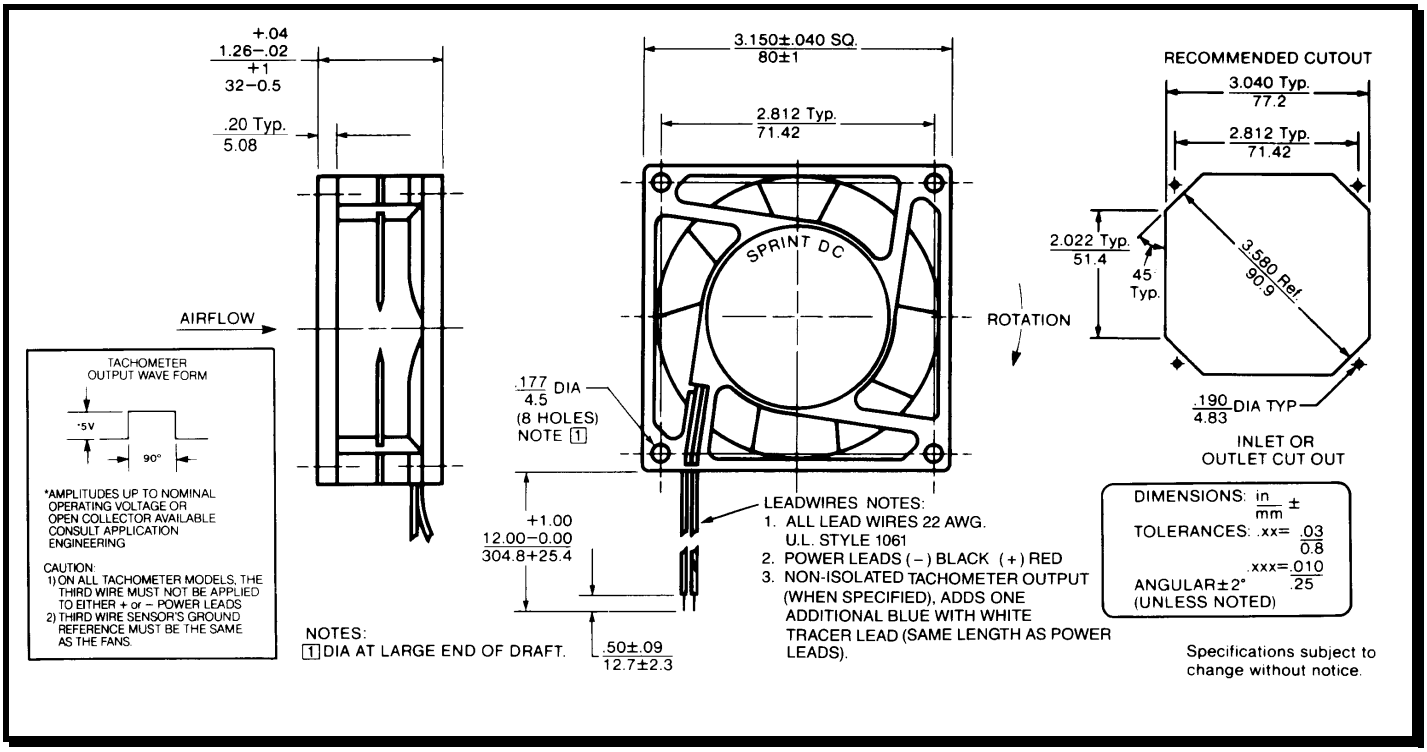

Motor (full speed):

Nominal Voltage	= 24 vdc
Operating Voltage Range	= 12 - 28 vdc
Nominal Running Current	= 0.14 amps
Max. Locked Rotor Current	= 0.40 amps
Running Power	= 3.3 watts
Average Speed	= 3400 RPM
Bearings	= Ball
Air Flow	= 33 CFM
Acoustic	= 40.9 dBA

Construction:
Venturi: Plastic, Black, UL 94V-0
Propeller: Plastic, Black, UL 94V-0

Life Expectancy:
This fan is designed for continuous duty life of 55,000 hours at 40°C.

Additional Features:
Brushless DC Motor
Locked Rotor Protection
Polarity Protection
Thermal Speed Control
Automatic Restart Capability
Operating Temperature: -10°C to 70°C
Storage temperature: -40°C to 85°C
Thermal Speed Control

Termination:
Thermistor on 25” zip cord
12” Lead wires, 22 AWG, UL 1061
Red = Power (+)
Black = Return (-)

Agency Approvals
UL, CE