Alle Rechte vorbehalten/ *All rights reserved*

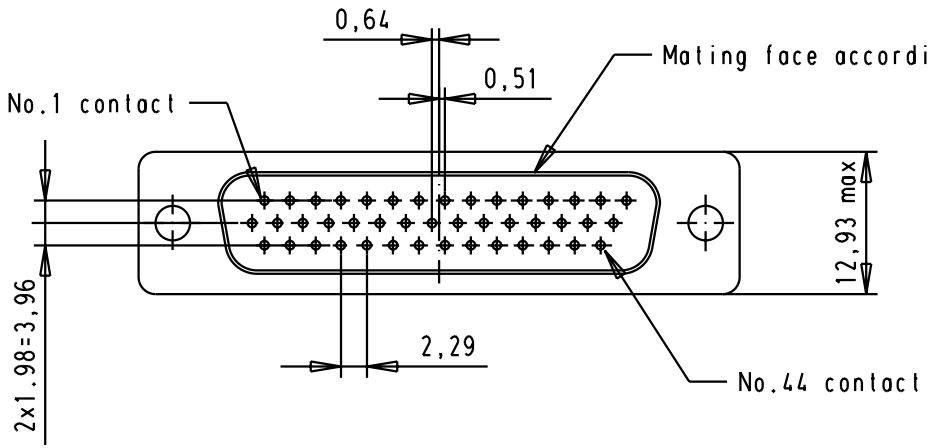

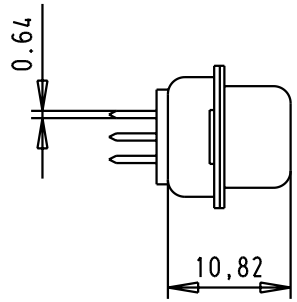

Printed board layout, component side

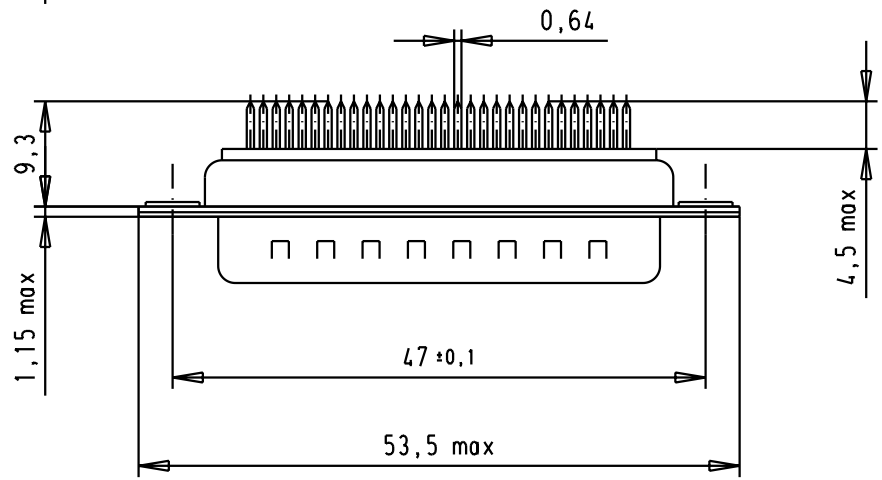

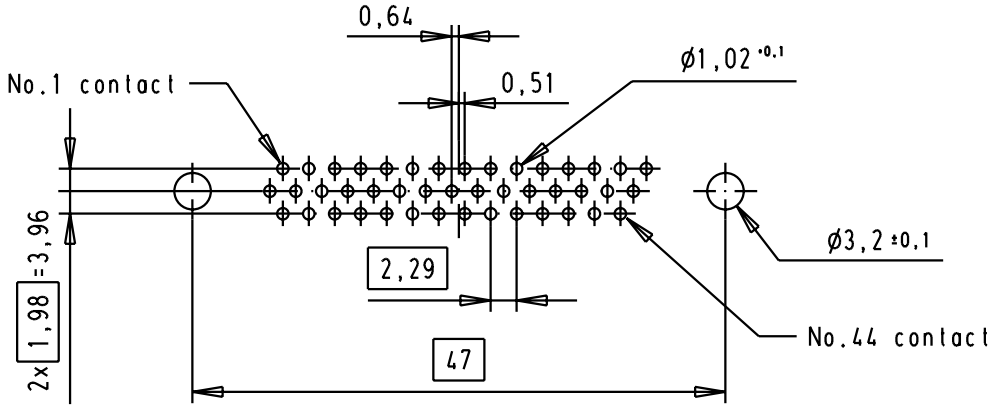

							Dat.	Name	All Dim. in mm Orig. Size DIN A 4	D-Sub, Male, high density, 44 poles, straight, with stamped solder contacts and hole	Maßstab/ *Scale* 1.5:1
						Detail.	16-SEP-02	CV			
						Insp.					
						Stand.					
09563615700	0.76 µm Au		31352	16-OCT-02	*S.H.*	HARTING EURL F-95972 Paris				TB 0956361x700	Blatt/ *Page* 1
09563617700	3		31064	16-SEP-02	CV						
Part number	Performance level		Mod.	Dat.	Name					Sub.	