THIS DRAWING IS UNPUBLISHED. RELEASED FOR PUBLICATION -,- .
© COPYRIGHT - BY TYCO ELECTRONICS CORPORATION. ALL RIGHTS RESERVED.

LOC	DIST
AJ	16

REVISIONS

P	LTR	DESCRIPTION	DATE	DWN	APVD
	A	REV PER ECO 06-002539	06APR06	GB	JH

1. SEE I.S. 408-9086

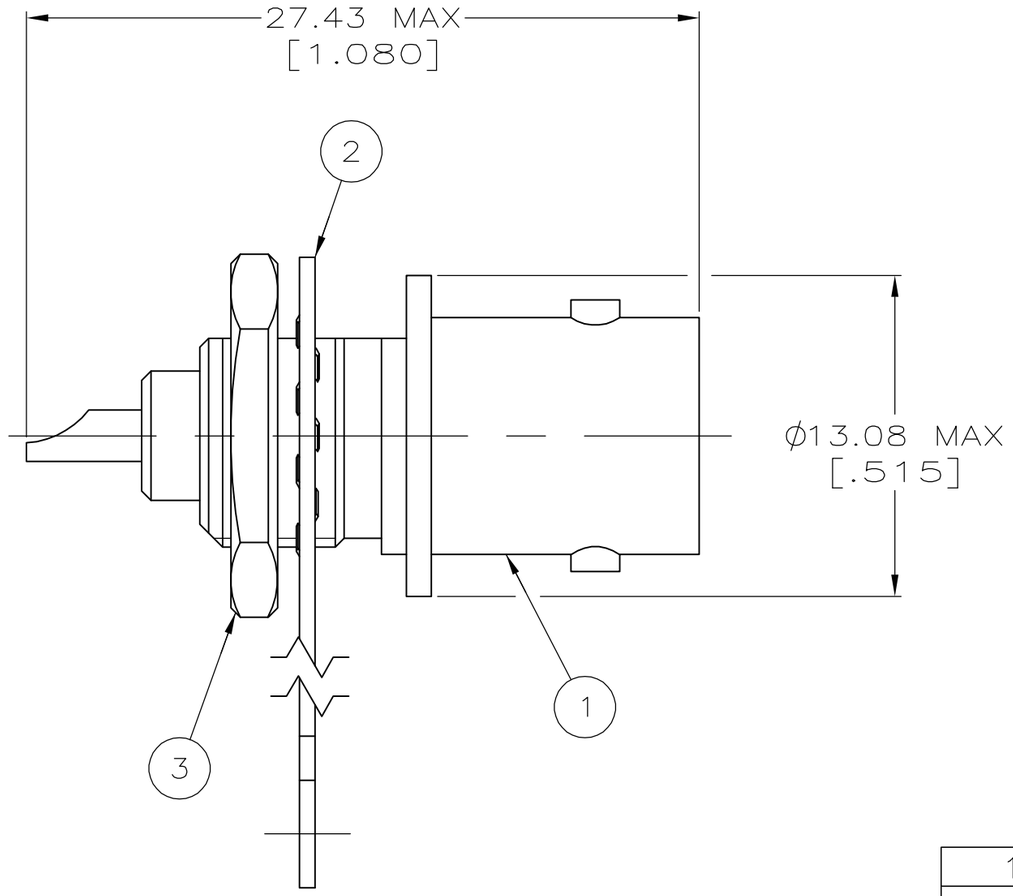

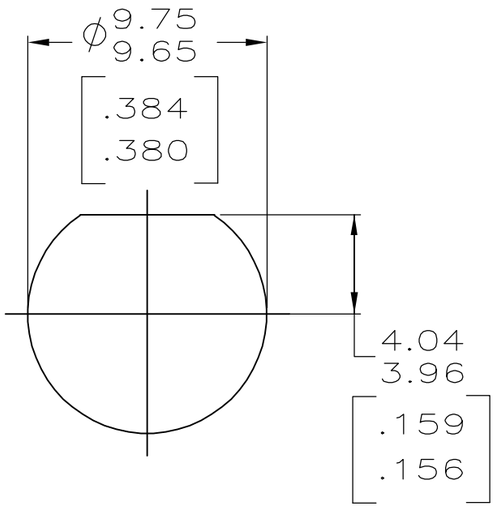

RECOMMENDED PANEL CUTOUT

1-330249-1	9-227260-0	221245-1	5221244-1
3 JAM NUT QTY=1	2 LOCKWASHER, TERMINAL QTY=1	1 JACK ASSY QTY=1	PART NUMBER

THIS DRAWING IS A CONTROLLED DOCUMENT.

DIMENSIONS: mm [INCHES]

TOLERANCES UNLESS OTHERWISE SPECIFIED:
0 PLC ± -
1 PLC ± -
2 PLC ± -
3 PLC ± -
4 PLC ± -
ANGLES ± -

MATERIAL -

FINISH -

DWN J. ALCORTA - DOCK5 21APR2005
CHK J. HAVENER 21APR2005
APVD J. LIPPERT 21APR2005
PRODUCT SPEC 108-12079
APPLICATION SPEC -
WEIGHT -

tyco Electronics
Tyco Electronics Corporation
Harrisburg, PA 17105-3608

NAME
SOLDER JACK
75 OHM, SERIES BNC
-

SIZE	CAGE CODE	DRAWING NO	RESTRICTED TO
A3	00779	C-5221244	-

CUSTOMER DRAWING

SCALE	SHEET	REV
4:1	1 OF 1	A