DRAWING MADE IN AMERICAN PROJECTION

NUMBER C-165303-E

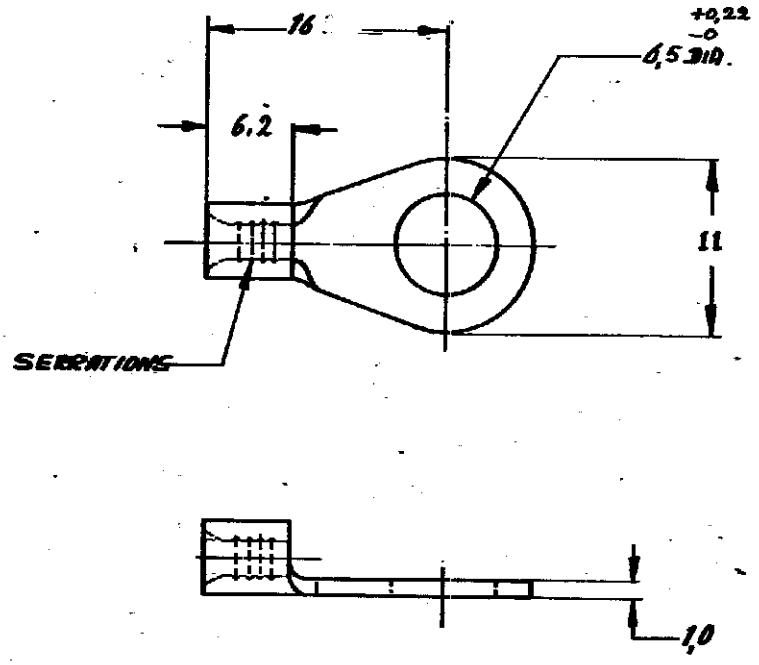

DO NOT SCALE PRINT

DIMENSIONS IN M.M.

165303	COPPER	TIN PLATED
ORDER NO.	MATERIAL	PLATING

DR. R. BHONDT. DATE 23/6-87 DG. DATE 27/6/10

CHK DATE APP. DATE 12-8-87

CUSTOMER COPY FOR REFERENCE ONLY

©1967 BY AMP-HOLLAND N.V. ALL RIGHTS RESERVED A-MP PRODUCTS COVERED BY PATENTS AND/OR PATENTS PENDING.

AMP-HOLLAND N.V.
'S-HERTOGENBOSCH
HOLLAND

WIRE-RANGE	INSUL.-RANGE	TYPE
4-6 mm²	—"—	-DIN- SOLISTRAND

SCALE	LOC	SIZE	NO	REV
—"—	H	A	C-165303-E	C

NAME RINGTONGUE stud M6

AMP 1202