Alle Rechte vorbehalten/ *All rights reserved*

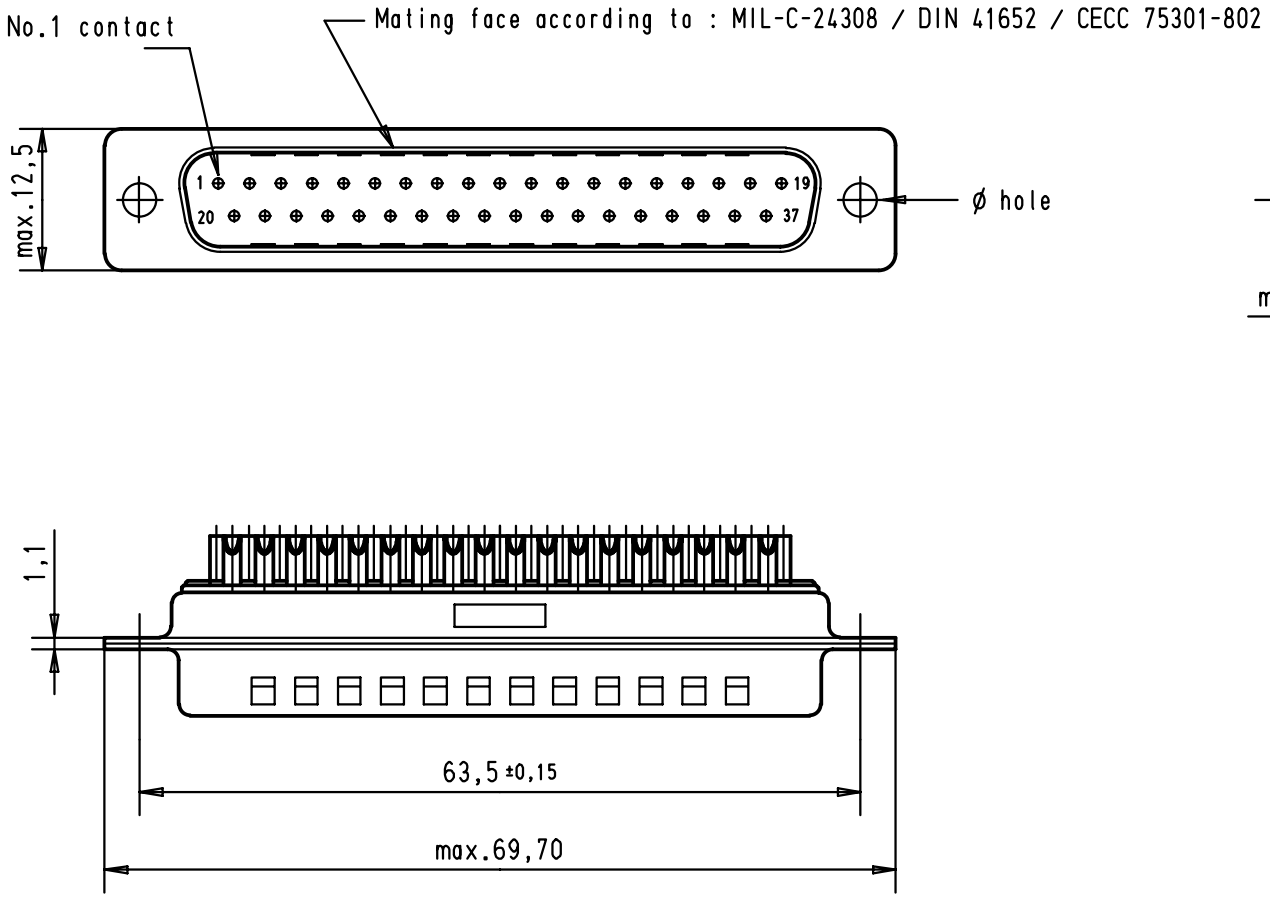


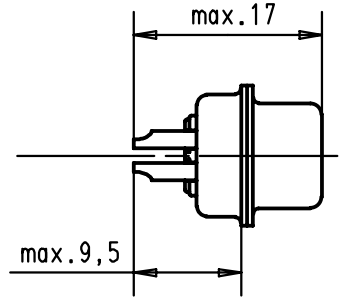


Max wire ø 1,05 mm

| Part number | ø hole | Performance level | Mod. | Dat. | Name |
|---|---|---|---|---|---|
| 09 67 037 5615.05 | 3.1 +0.1 | S4 | | | |
| 09 67 037 5615.00 | 3.1 +0.1 | 2 | | | |
| 09 67 037 5604.00 | 3.1 +0.1 | 3 | | | |
| | | | 29700 | 18/07/01 | AF |

| | Dat. | Name |
|---|---|---|
| Detail. | 18/07/01 | AF |
| Insp. | | |
| Stand. | | |

All Dim. in mm
Orig. Size DIN A 4

HARTING EURL
F-95972 Paris

D-Sub, Male, Straight, 37 Poles with turned solder buckets and hole

TB 096703756xx

Sub.

Maßstab/ *Scale* 1.5:1

Blatt/ *Page* 1/1