THIS DRAWING IS UNPUBLISHED. RELEASED FOR PUBLICATION 2009
© COPYRIGHT 2009 BY TYCO ELECTRONICS CORPORATION. ALL RIGHTS RESERVED.

LOC	DIST
A1	-

REVISIONS

P	LTR	DESCRIPTION	DATE	DWN	APVD
	A7	ECR-09-023155	22OCT2009	VG	AR
	A8	ECR-10-000686	12JAN2010	SR	AR
	A9	ECR-10-009092	28APR2010	RO	BR

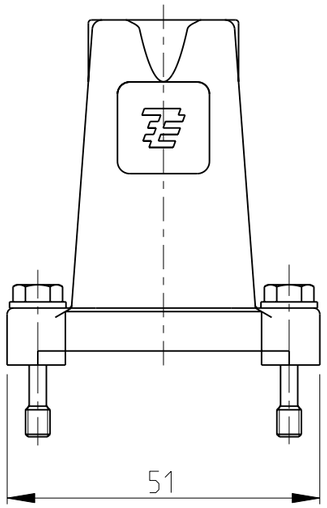

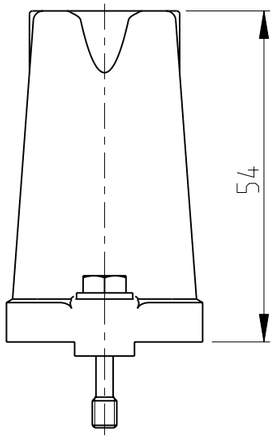

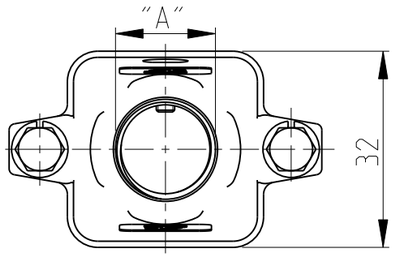

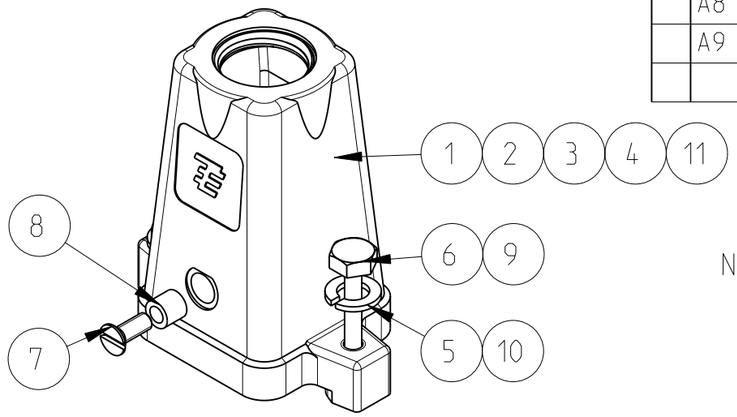

PN 0-1 AS SHOWN

PART NO.	ORDERING TEXT
0-1106402-7	EMV-K.3/4.ST-N
0-1106402-6	EMV-K.3/4.STO.1.M20.G
0-1106402-5	EMV-K.3/4.STO.1.M16.G
0-1106402-4	EMV.3/4.STO.1.M16.G
0-1106402-3	EMV-K.3/4.STO.1.M20.G
0-1106402-2	EMV.3/4.STO.1.M16.G
0-1106402-1	EMV-K.3/4.STO.1.M16.G

Notes

1 SUITABLE HOUSINGS: SERIES EMV, SIZE 1
CUSTOMER DRAWING 1102703; 1102702

2 STANDARDS: DIN EN 61984, DIN EN 60664-1

3 SURFACE: CHROMIT AL TCP PASSIVATION

4 TOOLS: SLOTTED SCREW DRIVER 4,0x0,8
HEXAGON SCREW DRIVER 7mm

5 VARNISH ON INSIDE AREA NOT NECESSARY

6 PACKAGING:
10 SETS IN A CARTON, PRE-MOUNTED

0-7	0-6	0-5	0-4	0-3	0-2	0-1	DESCRIPTION	"A"	MATERIAL	COLOR/SURFACE	NOTE	ITEM
PN/QTY												
1	-	-	-	-	-	-	CONNECTOR HOUSING		ALU ALLOY	BLACK	SERIES EMV-K.3/4.ST-N, SIZE 1, METRIC, W/O THREAD & LOGO	11
-	2	2	2	-	-	-	WASHER, PLAIN		STAINL. STEEL	BLANK	A4, DIN EN ISO 7089, 200HV (V4A)	10
-	2	2	2	-	-	-	SCREW, HEXAGON BOLT		STAINL. STEEL	BLANK	M4x22 DIN EN ISO 7964, REDUCED SHUNK (V4A)	9
1	1	1	1	1	1	1	HOSE SECTION		FKM	BLACK	SERIES EMV / HIP, Ø3x1x4.5	8
1	1	1	1	1	1	1	SCREW, SLOTTED COUNTERS. FLAT HEAD		STAINL. STEEL	BLANK	M3x8 DIN EN ISO 2009	7
2	-	-	-	2	2	2	SCREW, HEXAGON BOLT		STAINL. STEEL	BLANK	M4x22 DIN EN ISO 7964, REDUCED SHUNK	6
2	-	-	-	2	2	2	WASHER, PLAIN		STAINL. STEEL	BLANK	A4, DIN EN ISO 7089, 200HV	5
-	1	-	-	-	-	-	CONNECTOR HOUSING	M20	ALU ALLOY	WHITE 3	SERIES EMV-K, SIZE 1, METRIC	4
-	-	-	-	1	-	-	CONNECTOR HOUSING	M20	ALU ALLOY	BLACK 3	SERIES EMV-K, SIZE 1, METRIC	3
-	-	1	-	-	1	-	CONNECTOR HOUSING	M16	ALU ALLOY	BLACK 3	SERIES EMV-K, SIZE 1, METRIC	2
-	-	-	1	-	-	1	CONNECTOR HOUSING	M16	ALU ALLOY	GREY	SERIES EMV, SIZE 1, METRIC	1

PARTS LIST (PER ONE UNIT)

THIS DRAWING IS A CONTROLLED DOCUMENT FOR TYCO ELECTRONICS CORPORATION
IT IS SUBJECT TO CHANGE AND THE CONTROLLING ENGINEERING ORGANIZATION
SHOULD BE CONTACTED FOR THE LATEST REVISION.

DIMENSIONS: mm

TOLERANCES UNLESS OTHERWISE SPECIFIED:
0 PLC ±-
1 PLC ±-
2 PLC ±-
3 PLC ±-
4 PLC ±-
ANGLES ±1°

MATERIAL -
FINISH -

DWN V.GLUMM 14AUG2009
CHK H.Braun 14AUG2009
APVD T.Schnurpfeil 14AUG2009
PRODUCT SPEC -
APPLICATION SPEC -
WEIGHT -

Tyco Electronics
Tyco Electronics AMP GmbH
53757 Sankt Augustin (Germany)

NAME
CONNECTOR HOUSING ASS'Y, TOP ENTRY
SERIES EMV, SIZE 1, METRIC

SIZE	CAGE CODE	DRAWING NO	RESTRICTED TO
A3	00779	C-1106402	-

CUSTOMER DRAWING | SCALE 1:1 | SHEET 1 OF 1 | REV A9

AMP 1470-19 REV 31MAR2000

Pro/ENGINEER DRAWING