THIS DRAWING IS UNPUBLISHED. RELEASED FOR PUBLICATION -,- .
© COPYRIGHT - By - ALL RIGHTS RESERVED.

LOC	DIST
G	14

REVISIONS

P	LTR	DESCRIPTION	DATE	DWN	APVD
	K3	REVISED PER ECO-11-004917	11MAR11	RK	HMR

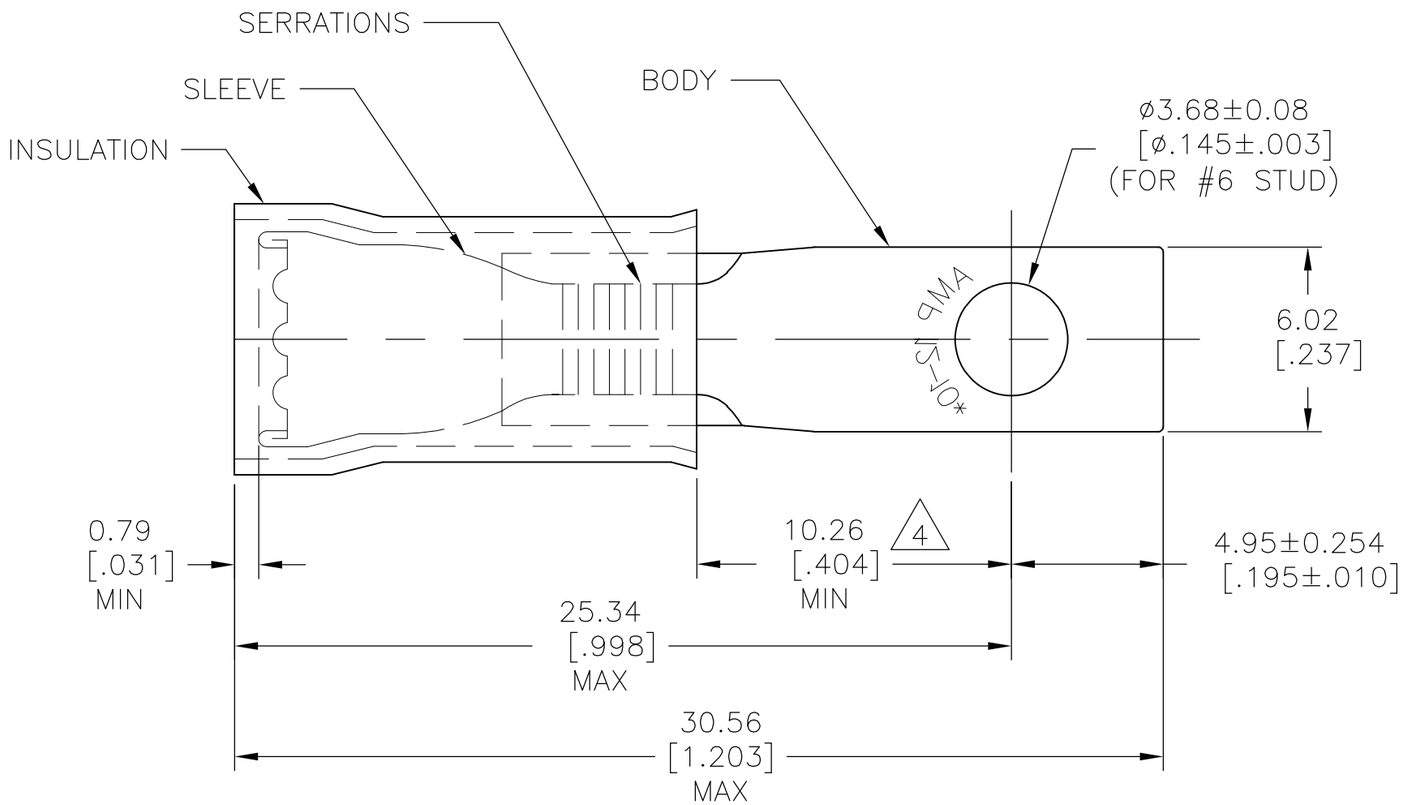

1 TONGUE MATERIAL THK: 1.02±0.05[.040±.002]

2 FOR 3.81[.150] TO 5.84[.230] WIRE INSULATION DIA

3 SUPERSEDED BY 2-327960-1

4 APPLIES FROM THE METAL EDGE OF THE BARREL TO THE CENTER OF THE STUD

5 MEETS MS17143-15, CLASS 1 & 2

6 MEETS MS17143-15, CLASS 2

	QTY	DESCRIPTION	MATERIAL & FINISH	PART NO
	1	ON TAPE	BODY & SLEEVE: COPPER (ASTM-B152) TIN PL (ASTM-B545) INSULATION: NYLON (ASTM-D4066) TYPE 1 COLOR: YELLOW	6 2-327960-2
OBSOLETE	~~1~~	~~2-327960-1 ON TAPE~~		~~2-327960-3~~
	1	WIRE TERMINAL		5 2-327960-1
	1	WIRE TERMINAL	BODY: COPPER (ASTM-B152) TIN PL (ASTM-B545) SLEEVE: COPPER (ASTM-B152) INSULATION: PVC COLOR: YELLOW	3 327960

THIS DRAWING IS A CONTROLLED DOCUMENT.

DIMENSIONS: mm [INCHES]

TOLERANCES UNLESS OTHERWISE SPECIFIED:

0 PLC	± -
1 PLC	± -
2 PLC	± -
3 PLC	± 0.20 [.008]
4 PLC	± -
ANGLES	± 5°

MATERIAL: SEE TABLE

FINISH: SEE TABLE

DWN RAGHAVENDRA 01SEP09
CHK JEFF RUTH 01SEP09
APVD TOM MICHIELUTTI 01SEP09
PRODUCT SPEC —
APPLICATION SPEC —
WEIGHT —

TE Connectivity

NAME: WIRE TERMINAL PIDG - RECTANGULAR TONGUE WIRE SIZE: 12-10

SIZE	CAGE CODE	DRAWING NO	RESTRICTED TO
A3	00779	C-327960	—

CUSTOMER DRAWING

SCALE	SHEET	REV
5:1	1 OF 1	K3