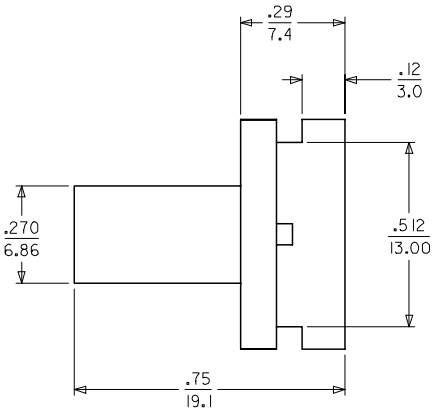

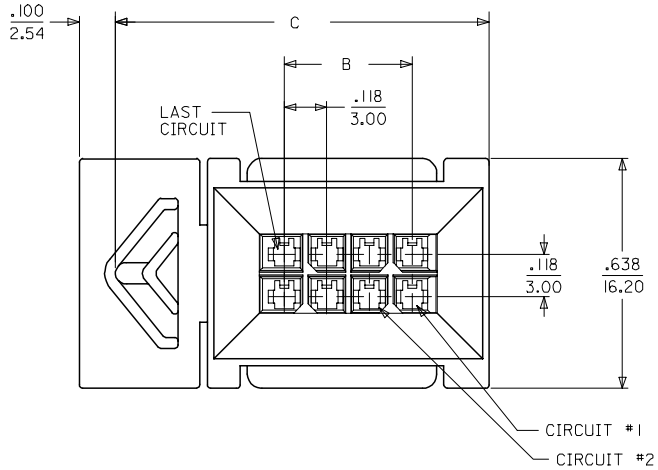

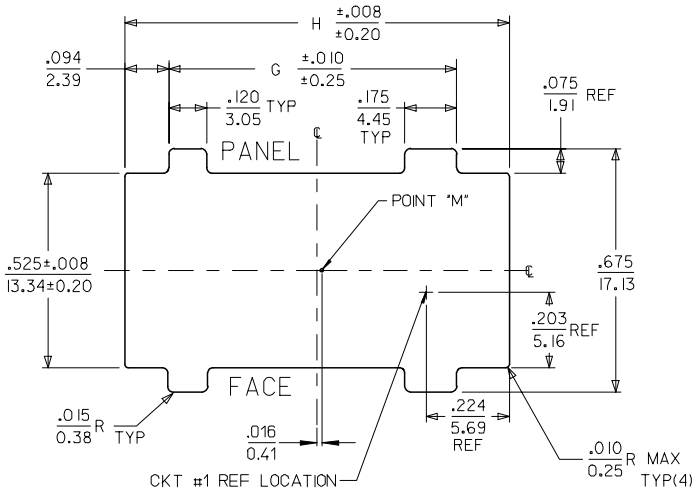

RECOMMENDED PANEL CUTOUT
(SEE NOTE #7 & #8)

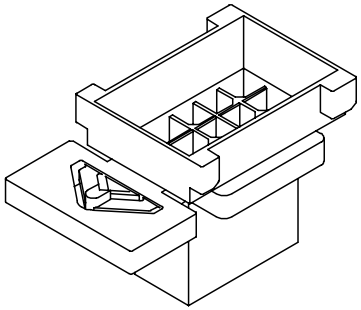

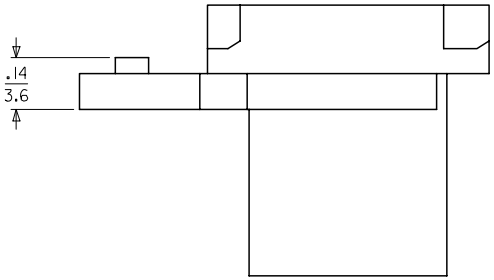

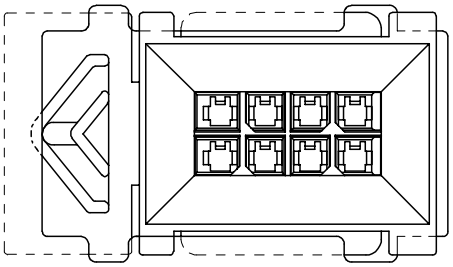

PLUG SHOWN MOUNTED IN PANEL

NOTES:
1. MATERIAL:
   UNFILLED POLYESTER (PBT), UL94V-0,
   COLOR: BLACK
2. FINISH: N/A
3. PRODUCT SPECIFICATION: PS-44300-001
4. PACKAGING SPECIFICATION:
   BP - BULK PACKED PER PK-44300-001
   TP - TRAY PACKED PER PK-44300-002
5. THIS PLUG MATES WITH MOLEX BMI RECEPTACLE 44133.
   (MOLEX DRAWING SD-44133-001)
6. THIS PLUG TO BE USED WITH MOLEX MALE CRIMP
   TERMINALS ONLY. (MOLEX DRAWING SD-43031-****)
7. THIS PLUG IS DESIGNED FOR USE WITH .062/1.57 MAX. TO .050/1.27 MINIMUM THICK PANELS.
8. WHEN MATING WITH 44133 SERIES, POINT "M" MUST ALIGN WITH THE PANEL CUT-OUT CENTERLINES
   DEFINED BY MOLEX DRAWING SD-44133-001.
9. HOUSING MAY EXHIBIT A SURFACE IMPERFECTION KNOWN AS "SINK MARKS" UP TO .024/0.60 MAX.
   THIS IS COSMETIC DEFECT AND DOES NOT EFFECT FUNCTION OF THE CONNECTOR.

CKT SIZE	MATERIAL NUMBER	DIM "B"	DIM "C"	DIM "G"	DIM "H"	PACKAGING (SEE NOTE 4)
4	44300-0400	.118 / 3.00	.80 / 20.3	.585 / 14.85	.821 / 20.85	BP
6	44300-0600	.236 / 6.00	.92 / 23.3	.703 / 17.85	.939 / 23.85	
8	44300-0800	.354 / 9.00	1.04 / 26.3	.821 / 20.85	1.057 / 26.85	
10	44300-1000	.472 / 12.00	1.16 / 29.3	.939 / 23.85	1.175 / 29.85	
12	44300-1200	.591 / 15.00	1.28 / 32.3	1.057 / 26.85	1.293 / 32.85	
14	44300-1400	.709 / 18.00	1.39 / 35.3	1.175 / 29.85	1.411 / 35.85	TP
16	44300-1600	.827 / 21.00	1.51 / 38.3	1.293 / 32.85	1.530 / 38.85	BP
18	44300-1800	.945 / 24.00	1.63 / 41.3	1.411 / 35.85	1.648 / 41.85	
20	44300-2000	1.063 / 27.00	1.75 / 44.3	1.530 / 38.85	1.766 / 44.85	
22	44300-2200	1.181 / 30.00	1.87 / 47.3	1.648 / 41.85	1.884 / 47.85	
24	44300-2400	1.299 / 33.00	1.98 / 50.3	1.766 / 44.85	2.002 / 50.85	TP

REV	DESCRIPTION
J1	REVISE PACKAGING EC NO: UCP2007-2862 DRWN:MKIPPER 2007/05/15 CHKD:SSOUSEK 2007/06/01 APPR:FSMITH 2007/06/04

QUALITY SYMBOLS: ▼=0, ⊽=0

GENERAL TOLERANCES (UNLESS SPECIFIED)

	mm	INCH
4 PLACES	± ---	± ---
3 PLACES	± ---	± .010
2 PLACES	± 0.25	± .014
1 PLACE	± 0.35	± ---
ANGULAR ±1/2°		

DRAFT WHERE APPLICABLE MUST REMAIN WITHIN DIMENSIONS

DIMENSION STYLE: IN/MM
SCALE: 4:1
DESIGN UNITS: METRIC
THIRD ANGLE PROJECTION

		DATE
DRAWN BY	SOMMER	1998/11/25
CHECKED BY	SOMMER	1998/11/25
APPROVED BY	EDGLEY	1998/11/25

TITLE: MICRO-FIT 3.0 DUAL ROW BMI PANEL MOUNT PLUG

molex MOLEX INCORPORATED

MATERIAL NO.: SEE CHART
DOCUMENT NO.: SD-44300-001
SHEET NO.: 1 OF 1
SIZE: C

THIS DRAWING CONTAINS INFORMATION THAT IS PROPRIETARY TO MOLEX INCORPORATED AND SHOULD NOT BE USED WITHOUT WRITTEN PERMISSION