THIS DRAWING IS UNPUBLISHED. RELEASED FOR PUBLICATION -,- .
© COPYRIGHT - By - ALL RIGHTS RESERVED.

LOC	DIST
CM	00

REVISIONS

P	LTR	DESCRIPTION	DATE	DWN	APVD
	S1	REVISED PER ECO-11-004820	11MAR11	RK	HMR

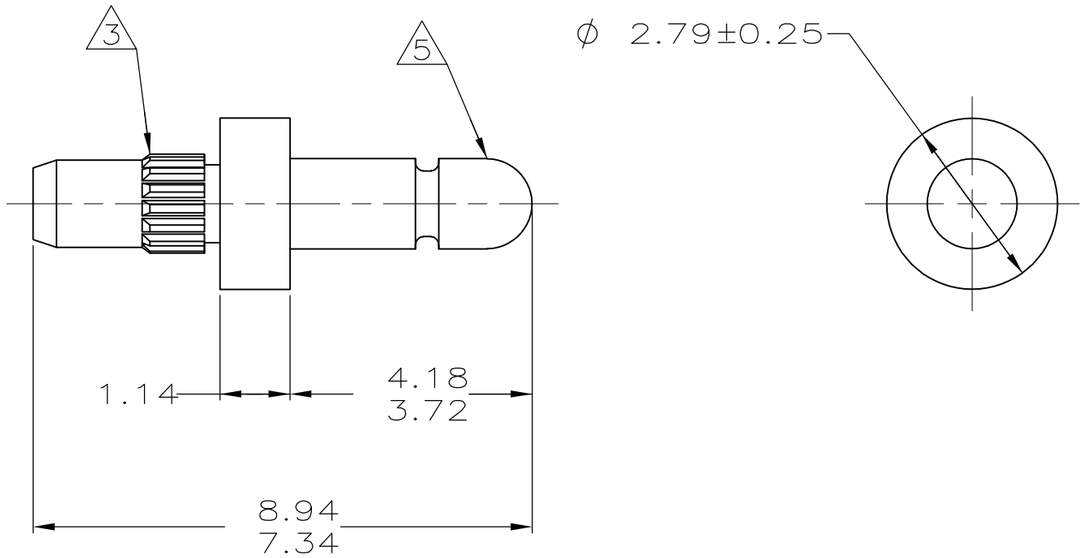

1. 0.00381 MIN BRIGHT TIN-LEAD PLATING ALL OVER.
2. 0.00076 MIN GOLD PLATING ALL OVER.
3. REED STRAIGHT TOOTH KNURL CS 80-80 T.P.I., 125 TEETH, 70° INCLUDED ANGLE. FITS 1.50 - 1.57 DIAMETER HOLE IN A 1.59 PRINTED CIRCUIT BOARD.
4. PARTS TO COMPLY WITH AMP SOLDERABILITY SPECIFICATION 109-11-3.
5. MATES WITH AMP PARTS 60354 AND 60598.
6. 0.00381 MIN BRIGHT TIN PLATING ALL OVER.

6	3-60599-1
2	60599-3
1	60599-1
FINISH	PART NUMBER

-	-
8.94	.352
7.34	.289
4.18	.165
3.72	.146
2.79	.110
1.59	.063
1.57	.062
1.50	.059
1.47	.058
1.14	.045
0.25	.010
0.13	.005
0.00381	.000150
0.00076	.000030
MM	IN

CONVERSION TABLE

METRIC

THIS DRAWING IS A CONTROLLED DOCUMENT.

DIMENSIONS: mm

TOLERANCES UNLESS OTHERWISE SPECIFIED:
0 PLC ±
1 PLC ±
2 PLC ± 0.13
3 PLC ±
4 PLC ±
ANGLES ±

MATERIAL: BRASS

FINISH: SEE TABLE

DWN S. CARPENTER 21AUG2003
CHK J. ELLIS 21AUG2003
APVD J. ELLIS 21AUG2003
PRODUCT SPEC 108-1025
APPLICATION SPEC 114-1008
WEIGHT

TE Connectivity

NAME: PIN, .058 DIAMETER, BRASS, KNURLED, P.C. CONTACT

SIZE	CAGE CODE	DRAWING NO	RESTRICTED TO
A3	00779	C-60599	-

CUSTOMER DRAWING

SCALE 10:1 SHEET 1 OF 1 REV S1

1470-19 (3/11)