THIS DRAWING IS UNPUBLISHED. RELEASED FOR PUBLICATION -,- .
© COPYRIGHT - By - ALL RIGHTS RESERVED.

LOC	DIST
GP	00

REVISIONS

P	LTR	DESCRIPTION	DATE	DWN	APVD
	P	REVISED PER ECO-11-004835	11MAR11	RK	HMR

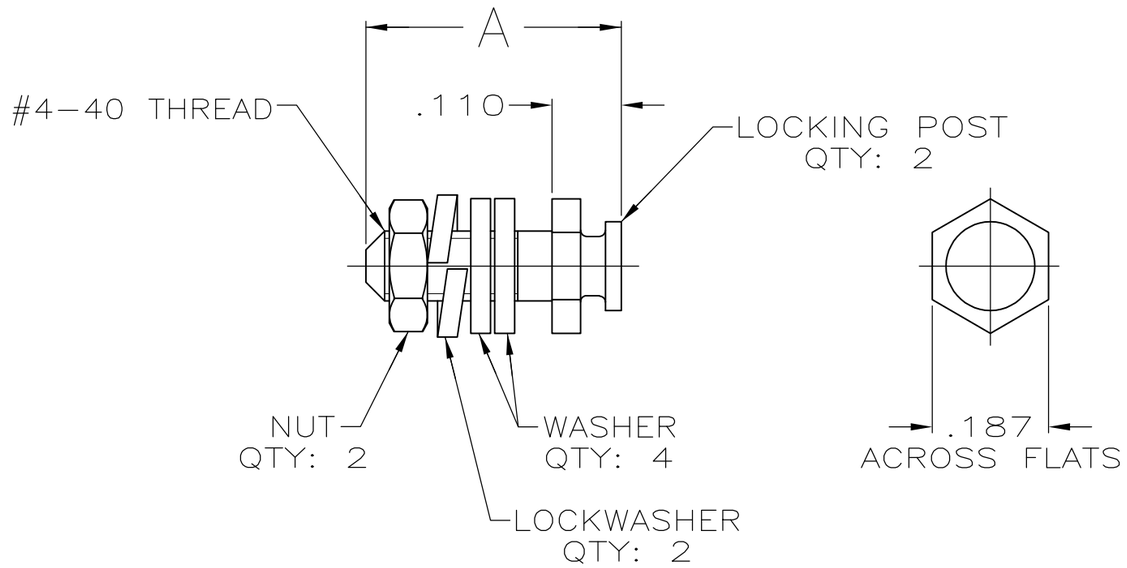

1. ZINC PLATED .000200-.000400 THICK, YELLOW CHROMATE.
2. ZINC PLATED .000200-.000400 THICK, CLEAR CHROMATE.
3. PARTS PACKAGED UNASSEMBLED.
4. PARTS PACKAGED AS A UNIT KIT.
5. PARTS INDIVIDUALLY BULK PACKAGED & SHIPPED AS A UNIT PACKAGE.

PACKAGING	FINISH	A	PART NO
5	1	.560	5206514-7
4	1	.560	5206514-6
4	2	.410	5206514-4
5	1	.410	5206514-3
4	1	.410	5206514-1

THIS DRAWING IS A CONTROLLED DOCUMENT.

DIMENSIONS: INCHES

TOLERANCES UNLESS OTHERWISE SPECIFIED:
0 PLC ± -
1 PLC ± -
2 PLC ± -
3 PLC ± .015
4 PLC ± -
ANGLES ± -

MATERIAL: COLD ROLLED STEEL

FINISH: SEE TABLE

DWN S.WAITMAN 27JUN05
CHK C.ROHDE 27JUN05
APVD M.WALMSLEY 27JUN05
PRODUCT SPEC —
APPLICATION SPEC —
WEIGHT —

TE Connectivity

NAME: LOCKING POST KIT, AMPLIMITE —

SIZE	CAGE CODE	DRAWING NO	RESTRICTED TO
A3	00779	C-5206514	—

CUSTOMER DRAWING

SCALE 4:1 SHEET 1 OF 1 REV P