THIS DRAWING IS UNPUBLISHED. RELEASED FOR PUBLICATION 20
© COPYRIGHT 20 BY TYCO ELECTRONICS CORPORATION. ALL RIGHTS RESERVED.

| LOC | DIST |
|---|---|
| E | B |

REVISIONS

| P | LTR | DESCRIPTION | DATE | DWN | APVD |
|---|---|---|---|---|---|
| | J | EB00-0350-97 | 18/6/97 | JM | MW |
| | K | EBA0-0024-03 | 30/07/03 | MJG | BB |
| | L | ECR-05-011882 | 27/09/05 | MJH | BB |
| | L1 | ECR-09-022016 | 05SEP2009 | MJH | RB |

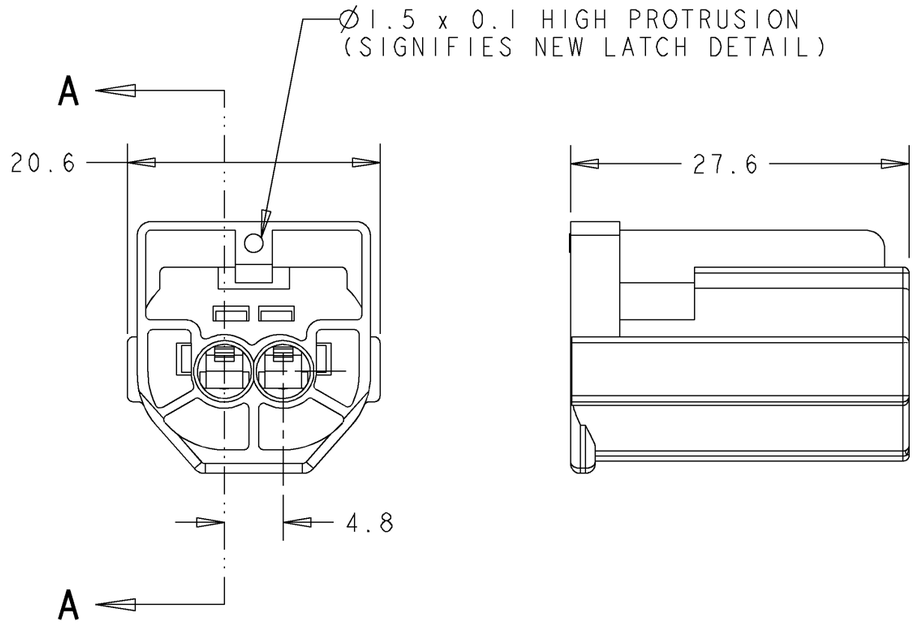


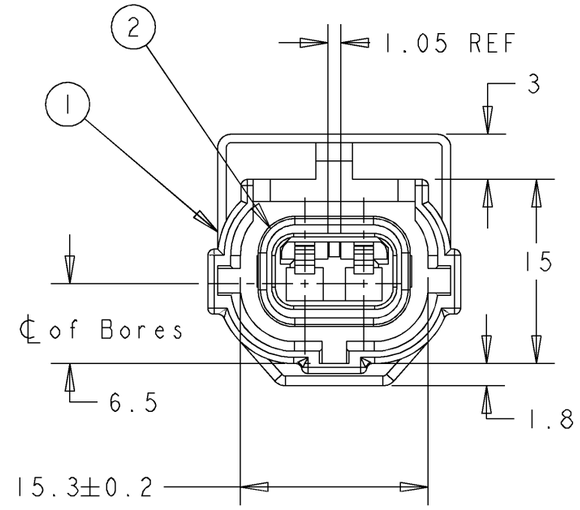


CONTROL DIMENSION

SECTION **A-A**

SEAL REMOVED FOR CLARITY

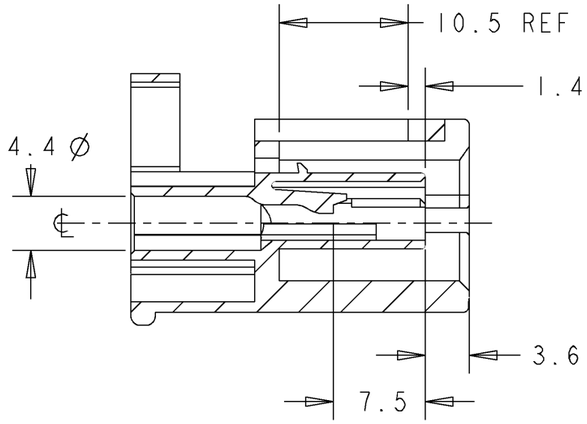


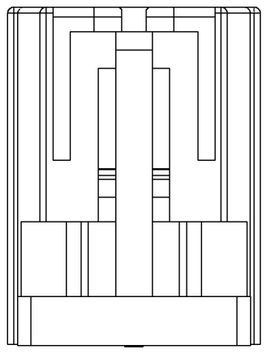

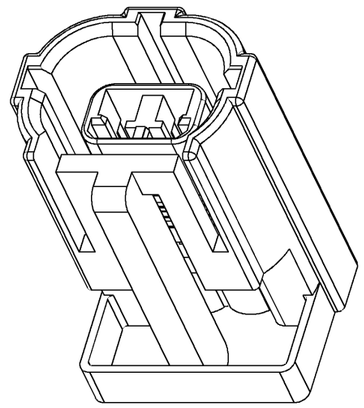

SCALE 2:1

| ITEM | COLOUR | MATERIAL | PART NO | DESCRIPTION | Qty | ASSY PT NO |
|---|---|---|---|---|---|---|
| 2 | GREY | NITRILE | 173072-1 | PERIPHERAL SEAL | 1 | 1-344276-4 (WHITE) |
| 1 | WHITE | NYLON 66 | 344275-4 | 2 WAY REC HSG | 1 | |
| 2 | GREY | NITRILE | 173072-1 | PERIPHERAL SEAL | 1 | 1-344276-3 (BLUE) |
| 1 | BLUE | NYLON 66 | 344275-3 | 2 WAY REC HSG | 1 | |
| 2 | GREY | NITRILE | 173072-1 | PERIPHERAL SEAL | 1 | 1-344276-2 (RED) |
| 1 | RED | NYLON 66 | 344275-2 | 2 WAY REC HSG | 1 | |
| 2 | GREY | NITRILE | 173072-1 | PERIPHERAL SEAL | 1 | 1-344276-1 (BLACK) |
| 1 | BLACK | NYLON 66 | 344275-1 | 2 WAY REC HSG | 1 | |
| 2 | ORANGE | SILICONE | 347702-1 | PERIPHERAL SEAL | 1 | 344276-4 (WHITE) |
| 1 | WHITE | NYLON 66 | 344275-4 | 2 WAY REC HSG | 1 | |
| 2 | ORANGE | SILICONE | 347702-1 | PERIPHERAL SEAL | 1 | 344276-3 (BLUE) |
| 1 | BLUE | NYLON 66 | 344275-3 | 2 WAY REC HSG | 1 | |
| 2 | ORANGE | SILICONE | 347702-1 | PERIPHERAL SEAL | 1 | 344276-2 (RED) |
| 1 | RED | NYLON 66 | 344275-2 | 2 WAY REC HSG | 1 | |
| 2 | ORANGE | SILICONE | 347702-1 | PERIPHERAL SEAL | 1 | 344276-1 (BLACK) |
| 1 | BLACK | NYLON 66 | 344275-1 | 2 WAY REC HSG | 1 | |

AMP 1470-19 REV 31MAR2000

THIS DRAWING IS A CONTROLLED DOCUMENT FOR TYCO ELECTRONICS CORPORATION IT IS SUBJECT TO CHANGE AND THE CONTROLLING ENGINEERING ORGANIZATION SHOULD BE CONTACTED FOR THE LATEST REVISION.

DIMENSIONS: mm

TOLERANCES UNLESS OTHERWISE SPECIFIED:
0 PLC ±-
1 PLC ±0.5
2 PLC ±0.5
3 PLC ±0.5
4 PLC ±-
ANGLES ±2

MATERIAL SEE TABLE

FINISH -

DWN M.GREENER 28JUL2003
CHK M.HARRIS 28JUL2003
APVD B.BAKER 28JUL2003
PRODUCT SPEC -
APPLICATION SPEC -
WEIGHT -

Tyco Electronics

Tyco Electronics UK Ltd,
Stanmore, Middx, HA7 4RS.

NAME
2 WAY RECEPTACLE HOUSING
-
ECONOSEAL 3 LOW CURRENT

| SIZE | CAGE CODE | DRAWING NO | RESTRICTED TO |
|---|---|---|---|
| A3 | 00779 | C-344276 | - |

CUSTOMER DRAWING | SCALE 2:1 | SHEET 1 OF 1 | REV L1