2014/09/19 18:41:27 SRoper

参考図：ご確認用。正式には別途納入仕様書をご請求願います。

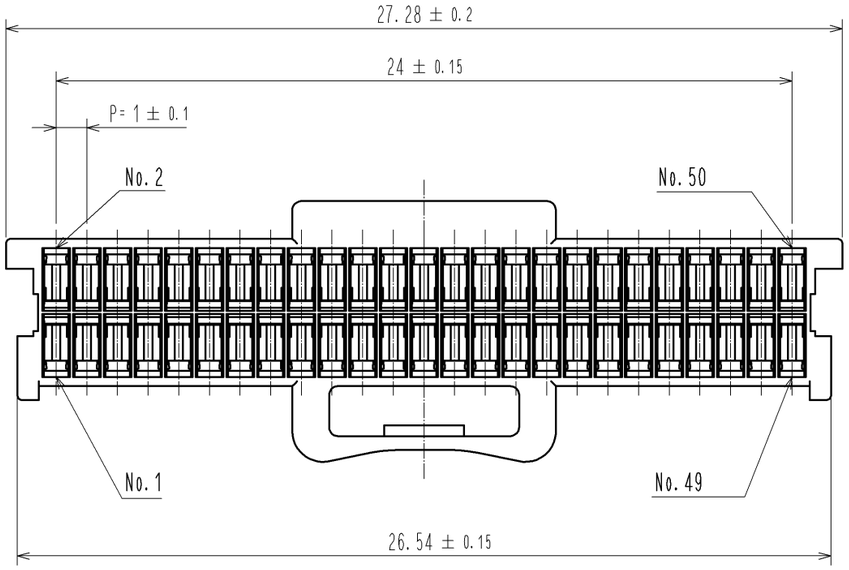

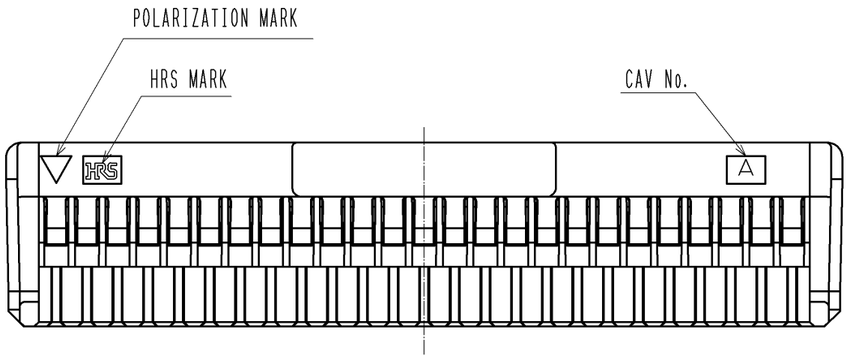

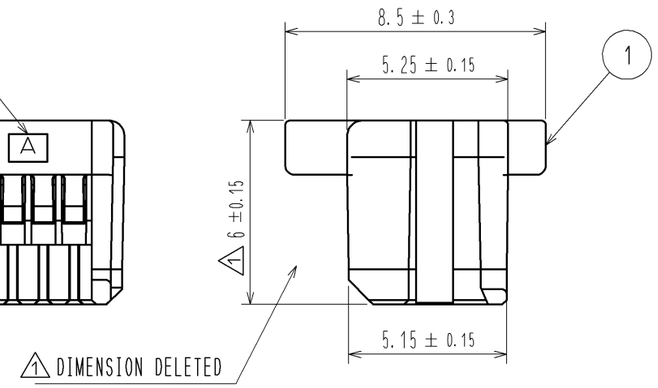

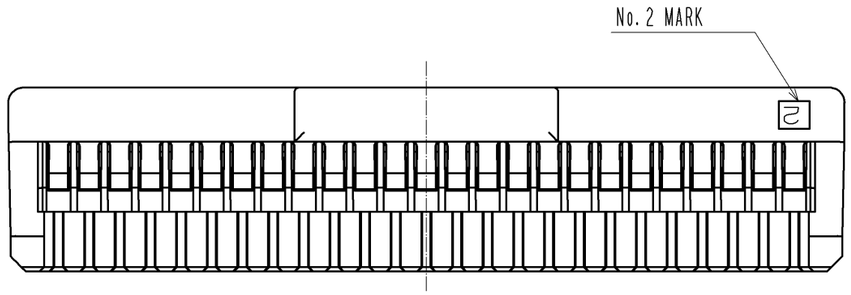

NOTE1. 100 PIECES PER PACK.

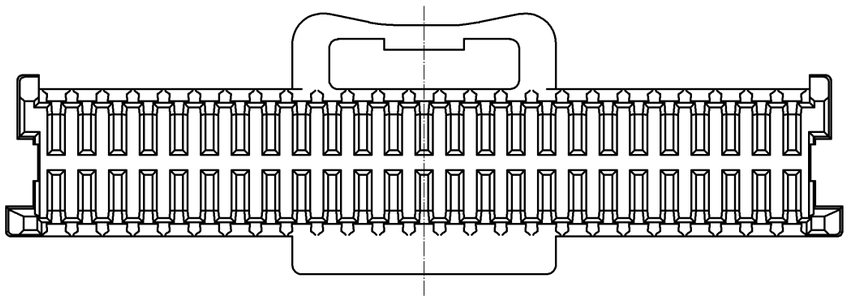

NO.	MATERIAL	FINISH , REMARKS	NO.	MATERIAL	FINISH , REMARKS
			1	PBT	UL94V-0, WHITE

UNITS	SCALE		COUNT	DESCRIPTION OF REVISIONS	DESIGNED	CHECKED	DATE
mm	5 : 1	1	2	DIS-H-008139	ST. SATO	HK. UMEHARA	13. 09. 06

HRS HIROSE ELECTRIC CO., LTD.

APPROVED	: KI. AKIYAMA	12. 05. 31	DRAWING NO.	EDC3-330238-00
CHECED	: HK. UMEHARA	12. 05. 31	PART NO.	DF50S-50DS-1C
DESIGNED	: TT. OHSAKO	12. 05. 30	CODE NO.	CL665-0012-4-00
DRAWN	: TT. OHSAKO	12. 05. 30		1 / 1