FEMALE END VIEW

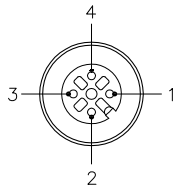

1 = BROWN
2 = WHITE
3 = BLUE
4 = BLACK

TYPICAL PANEL CUTOUT

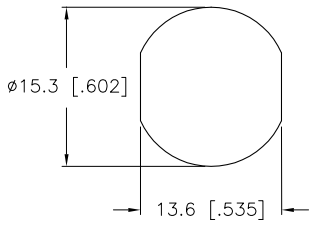

SPECIFICATIONS

CONTACT CARRIER MATERIAL	NYLON OR TPU
CONTACT MATERIAL/PLATING	BRASS/GOLD
O–RING MATERIAL	BUNA–N
RATED CURRENT [A]	4.0 A
RATED VOLTAGE [V]	250 V
HOUSING, LOCKNUT MATERIAL/PLATING	BRASS/NICKEL
NUMBER OF CONDUCTORS [AWG]	4x18 AWG
TEMPERATURE RATING	–40°C to +105°C (–40°F to +221°F)
PROTECTION CLASS	MEETS NEMA 1,3,4,6P AND IEC IP68

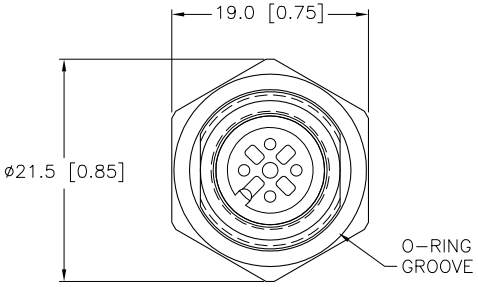

END VIEW
LOCKNUT NOT SHOWN

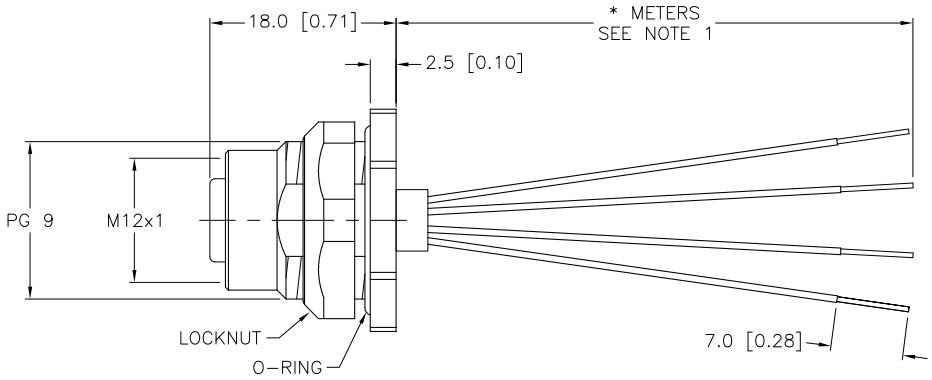

CABLE LENGTH	TOLERANCE
ALL LENGTHS	+ 4% (OR 50mm) OF LENGTH – 0% (OR 0mm) OF LENGTH WHICHEVER IS GREATER
STRIP LENGTH	**TOLERANCE**
0–7mm	±0.5mm
8–29mm	±1.0mm
30–49mm	±2.0mm
50–69mm	±3.0mm
70–100mm	±4.0mm
OVER 100mm	±5.0mm

NOTES:

1. "*" INDICATES LEAD LENGTH IN METERS. CONTACT TURCK TO ORDER SPECIFIC LENGTHS.

2. "/S613" DESIGNATES 18 AWG CONDUCTORS.

SOURCE DRAWING - FOR REFERENCE ONLY

RELATED DOCUMENTS
1.
2.
3.
4.

3RD ANGLE PROJECTION

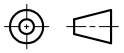

THIS DRAWING IS PROPERTY OF TURCK INC. USE OF THIS DOCUMENT WITHOUT WRITTEN PERMISSION IS PROHIBITED.

TURCK INC
High Technology Sensors and Automation Controls

3000 CAMPUS DRIVE
MINNEAPOLIS, MN 55441
1–800–544–7769
(763) 553–7300
(763) 553–0708 fax
turck.com

MATERIAL: SEE SPECIFICATIONS

FINISH: SEE SPECIFICATIONS

ALL DIMENSIONS DISPLAYED ON THIS DRAWING ARE FOR REFERENCE ONLY

CONTACT TURCK FOR MORE INFORMATION

DRFT: RDS | DATE: 05/14/08
DSGN: | SCALE: 1=.8

UNIT OF MEASUREMENT
MILLIMETER [INCH]
DO NOT SCALE THIS DRAWING

DESCRIPTION: FKFD 4.4–*/S613

IDENTIFICATION NO.:

REV: C

FILE: 777015476 | SHEET 1 OF 1

REV	DESCRIPTION	BY	DATE	ECO NO.
C	DRAWING PROCESSED AS PART OF ECO 33971	CBM	04/06/11	33971