THIS DRAWING IS UNPUBLISHED. RELEASED FOR PUBLICATION -,- .
© COPYRIGHT - By - ALL RIGHTS RESERVED.

LOC	DIST
G	14

REVISIONS

P	LTR	DESCRIPTION	DATE	DWN	APVD
	F2	REVISED PER ECO-11-004820	11MAR11	RK	HMR

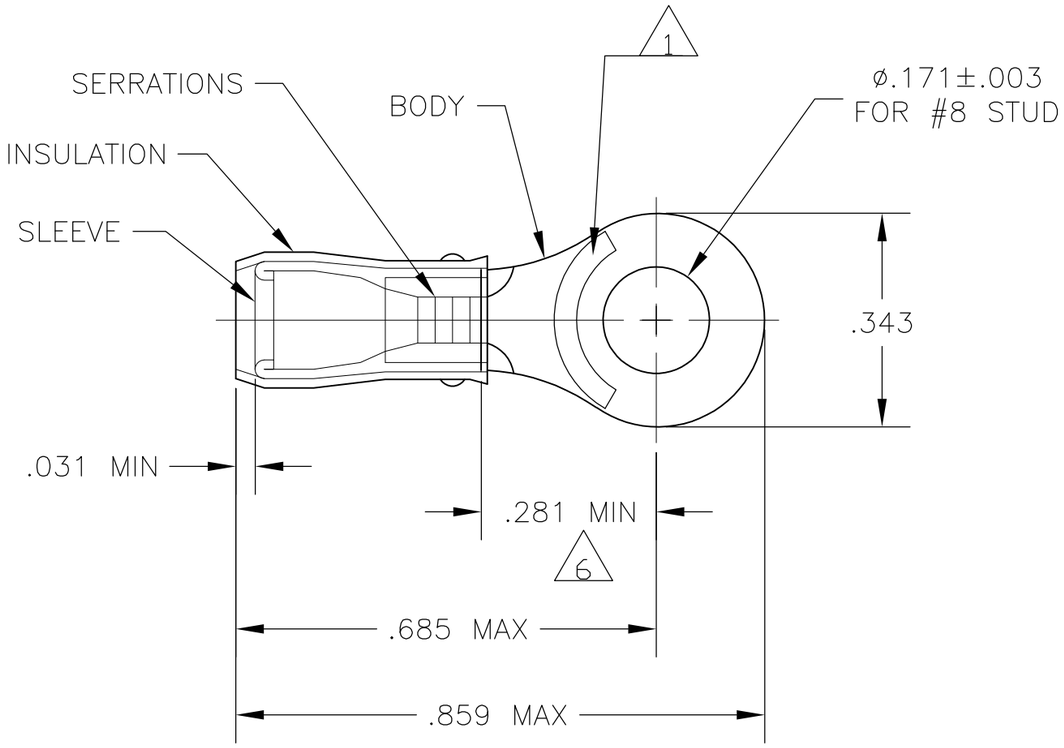

1. STAMP AMP 16-14* APPROX AS SHOWN
2. WIRE INSULATION DIA: .105-.150
3. TONGUE MATERIAL THK: .031±.002
4. BODY & SLEEVE: TIN PLATE PER ASTM B545,
5. BODY & SLEEVE- CU PER ASTM B152
   INSULATION - NYLON, COLOR - BLUE
6. APPLIES FROM EDGE OF METAL WIRE BARREL TO CENTER OF STUD HOLE.

QTY	PACKAGE TYPE	PART NO
100	LOOSE PIECE, BOX	8-320560-1
5000	320560 ON TAPE	2-320560-1
1000	LOOSE PIECE	320560

AMP INCORPORATED
CUSTOMER SERVICE SYSTEMS

FOR ADDITIONAL PRODUCT INFORMATION OR COPIES OF DRAWINGS AND TECHNICAL DOCUMENTS	PRODUCT INFORMATION CENTER 1-800-522-6752
FOR APPLICATION TOOLING INFORMATION	TOOLING ASSISTANCE CENTER 1-800-722-1111
FOR ORDER ENTRY	1-800-526-5142

THIS DRAWING IS A CONTROLLED DOCUMENT FOR AMP INCORPORATED. IT IS SUBJECT TO CHANGE AND THE CONTROLLING ENGINEERING ORGANIZATION SHOULD BE CONTACTED FOR THE LATEST REVISION.

MAX RECOMMENDED OPERATING TEMPERATURE: 105°C MAX

VOLTAGE RATING: -

CIRCULAR MIL AREA: 1.04-2.62mm² [2,050-5,180] STRANDED

THIS DRAWING IS A CONTROLLED DOCUMENT.

DIMENSIONS: INCHES

TOLERANCES UNLESS OTHERWISE SPECIFIED:
0 PLC ± -
1 PLC ± -
2 PLC ± -
3 PLC ± -
4 PLC ± -
ANGLES ± -

MATERIAL - 5

FINISH - 4

DWN	JR RUTH	08JAN07
CHK	T MICHIELUTTI	08JAN07
APVD	T MICHIELUTTI	08JAN07
PRODUCT SPEC	—	
APPLICATION SPEC	—	
WEIGHT	—	

TE Connectivity

NAME: TERMINAL, RING TONGUE, P.I.D.G. WIRE SIZE: 16-14 AWG

SIZE	CAGE CODE	DRAWING NO	RESTRICTED TO
A3	00779	C-320560	—

CUSTOMER DRAWING | SCALE 4:1 | SHEET 1 OF 1 | REV F2

1470-19 (3/11)