~~THIS DRAWING IS UNPUBLISHED.~~ RELEASED FOR PUBLICATION 9 DEC ,1991.
© COPYRIGHT 1991 BY TYCO ELECTRONICS CORPORATION. ALL INTERNATIONAL RIGHTS RESERVED.

LOC	DIST
—	—

REVISIONS

P	LTR	DESCRIPTION	DATE	DWN	APVD
	AM4	UPDATED BILINGUAL (ITALIAN & ENGLISH)	25JUN2010	PKS	RRP

SECT. C–C

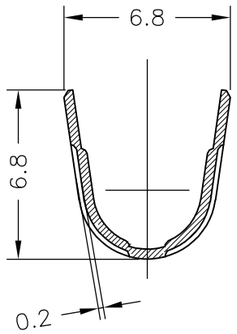

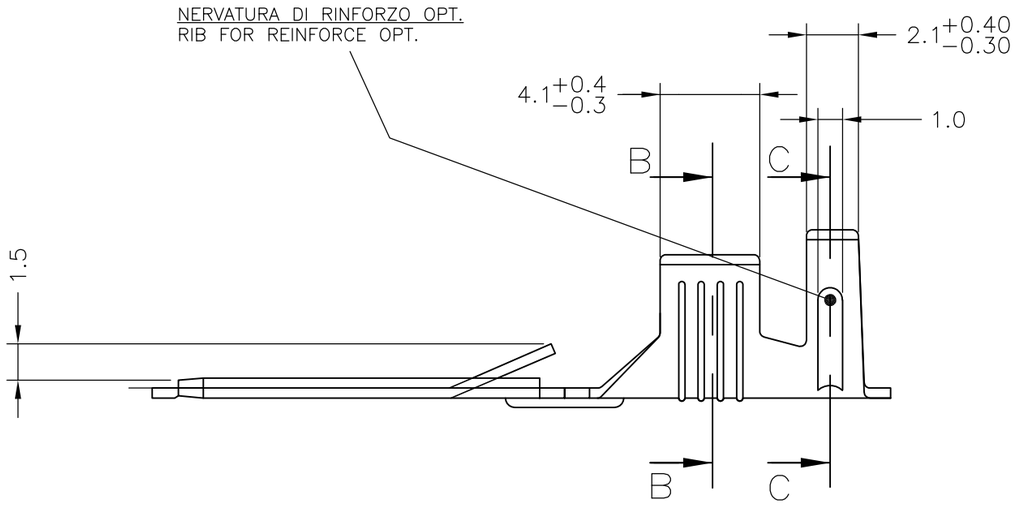

SECT. B–B

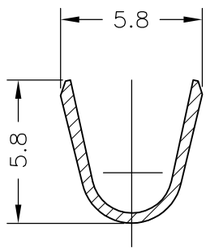

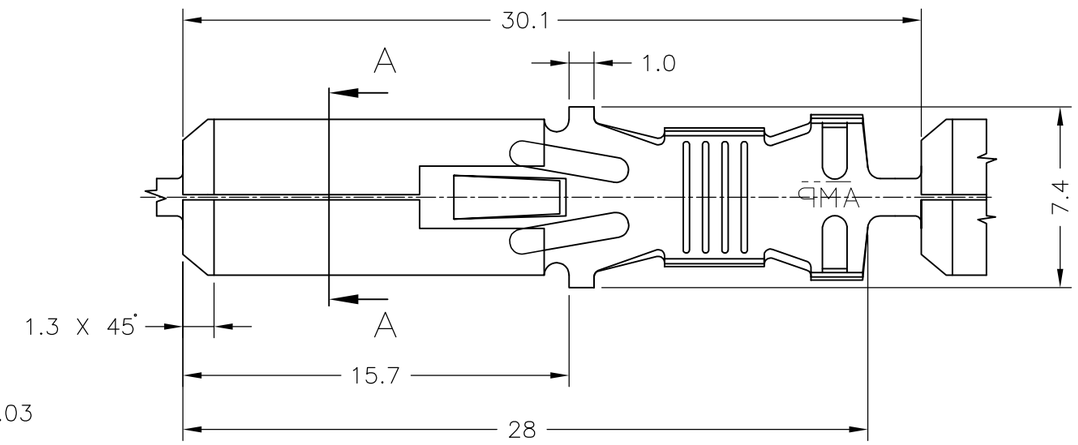

SECT. A–A

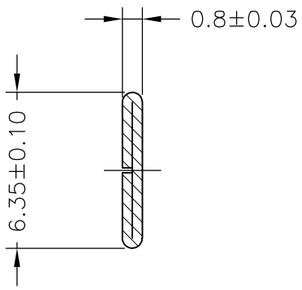

SENSO DI USCITA DALLA BOBINA
REEL OUT DIRECTION

1. NON DISPONIBILE DALL TE ITALIA [NOT AVAILABLE FROM TE ITALY]
2. BOBINATO SU BOBINA 13" CON CARTA INTERPOSTA TRA LE SPIRE [REELED ON 13" CARTON REEL WITH INTERLAYER PAPER STRIP]
3. BOBINATO SU BOBINA 10 1/2" CON CARTA INTERPOSTA TRA LE SPIRE [REELED ON 10 1/2" CARTON REEL WITH INTERLAYER PAPER STRIP]
4. BOBINATO SU BOBINA 12" CON CARTA INTERPOSTA TRA LE SPIRE [REELED ON 12" CARTON REEL WITH INTERLAYER PAPER STRIP]
5. OBSOLETE PARTS: OBSOLETE CIS STREAMLINING PER D.RENAUD/D.SINISI

5	OBSOLETE	–	OTTONE/ BRASS	~~1–180352–9~~ 3
5	OBSOLETE	1–180352–2	OT.STAG./ BRASS TINNED	~~1–180352–8~~ 1 3
5	OBSOLETE	1–180409–7	OT.PRE–ST./ BR.PRE–TIN	~~1–180352–7~~ 1 3
5	OBSOLETE	1–180409–6	OT.ARGENT/ BR. SILVERED	~~1–180352–6~~ 1 3
5	OBSOLETE	1–180409–5	BR.FOSF.ST/ PH.BR TINNED	~~1–180352–5~~ 1 3
5	OBSOLETE	1–180409–4	BR.FOSF.ARG./ PH.BR. SILVER	~~1–180352–4~~ 1 3
5	OBSOLETE	1–180409–3	BRONZO FOSF./ PHOS. BR	~~1–180352–3~~ 1 3
		1–180409–2	OT.STAG./ BR.TINNED	1–180352–2 1 3
5	OBSOLETE	1–180409–1	OTTONE/ BRASS	~~1–180352–1~~ 1 3
5	OBSOLETE	180409–6	OT.ARGENT. / BR.SILVERED	~~180352–9~~ 1 2
	OBSOLETE	~~180409–2~~	~~OT. STAG. / BR.TINNED~~	~~180352–8~~ 1 2
5	OBSOLETE	180409–7	OT.PRE–ST / BR. PRE–TIN	~~180352–7~~ 1 3
		180409–6	OT.ARGENT/ BR. SILVERED	180352–6 4
	OBSOLETE	~~180409–5~~	BR.FOSF.ST/PH.BR.TINNED	180352–5
	OBSOLETE	~~180409–4~~	~~BR.FOSF.ARG./PH.BR.SILVER~~	~~180352–4~~
	OBSOLETE	~~180409–3~~	BRONZO FOSF./ PHOS.BR	180352–3
		180409–2	OTT. PRE–STAG/BR.PRE–TIN	180352–2 4
		180409–1	OTTONE / BRASS	180352–1 4
		LOOSE PIECE NO.	MATERIALE / FINITURA MATERIAL / FINISH	NUMERO /PART NO.

THIS DRAWING IS A CONTROLLED DOCUMENT.

DIMENSIONS: mm

TOLERANCES UNLESS OTHERWISE SPECIFIED:

0 PLC	± –
1 PLC	± 0.3
2 PLC	± –
3 PLC	± –
4 PLC	± –
ANGLES	± 2°

RANGO FILO (WIRE RANGE) 4–6 mm²

DIAM. ISOLANTE (INS. DIA. RANGE) 3.4–5.1

MATERIAL –

FINISH SEE TABLE

DWN P.VERGANO 12–09–91
CHK –
APVD –
PRODUCT SPEC –
APPLICATION SPEC –
WEIGHT –

Tyco Electronics — Tyco Electronics ITALIA, COLLEGNO (TORINO)

NAME FASTIN–ON TAB .250 SRS – –

SIZE	CAGE CODE	DRAWING NO	RESTRICTED TO
A3	00779	C–180352	–

CUSTOMER DRAWING | SCALE 4:1 | SHEET 1 OF 1 | REV AM4

1470–19 (1/08)