THIS DRAWING IS UNPUBLISHED. RELEASED FOR PUBLICATION 2005
© COPYRIGHT 2005 BY TYCO ELECTRONICS CORPORATION. ALL INTERNATIONAL RIGHTS RESERVED.

LOC	DIST
J	

REVISIONS 変更

P	LTR	DESCRIPTION	DATE	DWN	APVD
	C	REVISED PER ECR-10-017569	25AUG2010	HMR	T.M

1747365-1:AS SHOWN

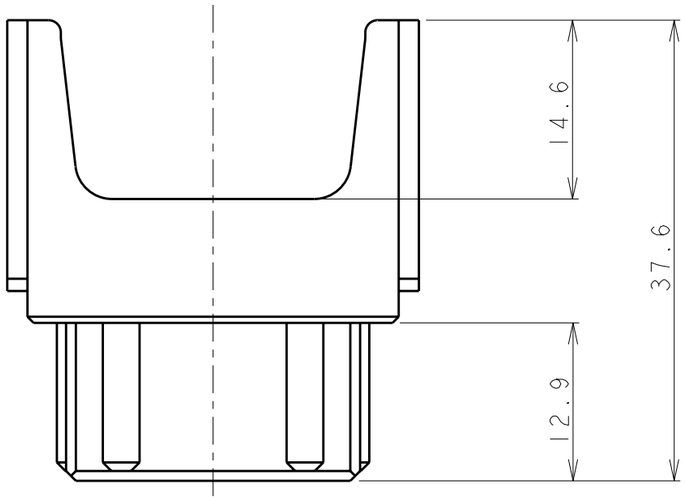

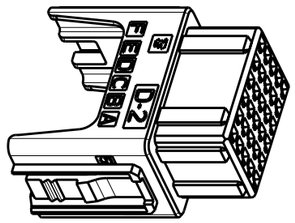

SCALE 1:1

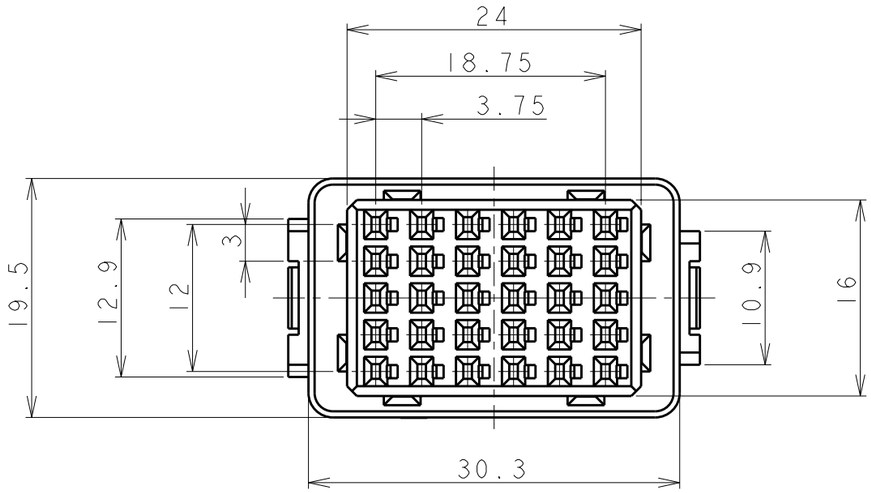

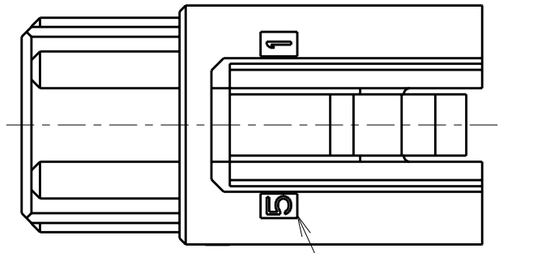

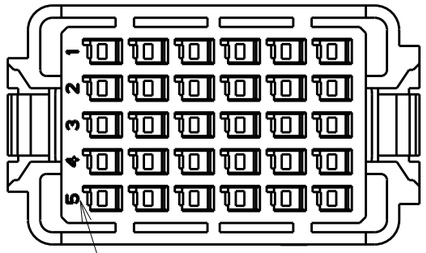

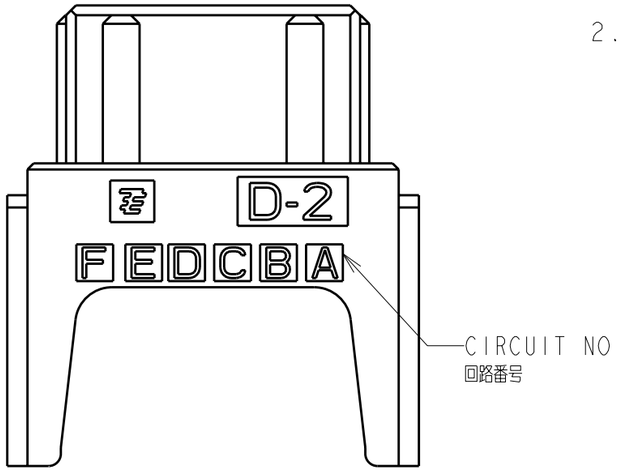

1. 材料：ガラス入り熱可塑性ポリエステル樹脂
   色：黒色
2. HTSコネクターモジ゛ュール固定フレーム使用型番
   サイス゛3：0-1108784-1
   サイス゛4：0-1108783-1，0-1108783-2
   サイス゛6：0-1108782-1，0-1108782-2
   サイス゛8：0-1108780-1，0-1108780-2

1. MATERIAL:GLASS FIELD THERMO PLASTIC,POLYESTER
   COLOR:BLACK
2. HTS CONNECTOR MODULE FIXATION FRAME USE P/No
   SIZE3:0-1108784-1
   SIZE4:0-1108783-1,0-1108783-2
   SIZE6:0-1108782-1,0-1108782-2
   SIZE8:0-1108780-1,0-1108780-2

THIS DRAWING IS A CONTROLLED DOCUMENT FOR TYCO ELECTRONICS CORPORATION IT IS SUBJECT TO CHANGE AND THE CONTROLLING ENGINEERING ORGANIZATION SHOULD BE CONTACTED FOR THE LATEST REVISION.

DIMENSIONS: 単位： 耗 mm

TOLERANCES UNLESS OTHERWISE SPECIFIED:
一般公差
~~0 PLC ±~~
~~1 PLC ±~~
~~2 PLC ±~~ ±0.35
~~3 PLC ±~~ ±3°
~~4 PLC ±~~
~~ANGLES ±~~

MATERIAL 材料 注記参照 SEE NOTES

FINISH 仕上

DWN	T.SAKAMOTO	31AUG2005
CHK	D.MITSUGI	31AUG2005
APVD	D.MITSUGI	31AUG2005
PRODUCT SPEC 製品規格	108-78284	
APPLICATION SPEC 取付適用規格	114-5258	
WEIGHT		

Tyco Electronics
Tyco Electronics Corporation
Kawasaki, Japan

NAME 名称
REC HSG 30P
DYNAMIC D-2800SERIES
WITH HTS CONNECTOR

SIZE	CAGE CODE	DRAWING NO 番号	RESTRICTED TO
A3	00779	C-1747365	

CUSTOMER DRAWING

SCALE 尺度 2:1 SHEET 1 OF 1 REV C

1470-19 (2/09)

Pro/ENGINEER DRAWING