SM-05S-05A-H ZM50E10F01

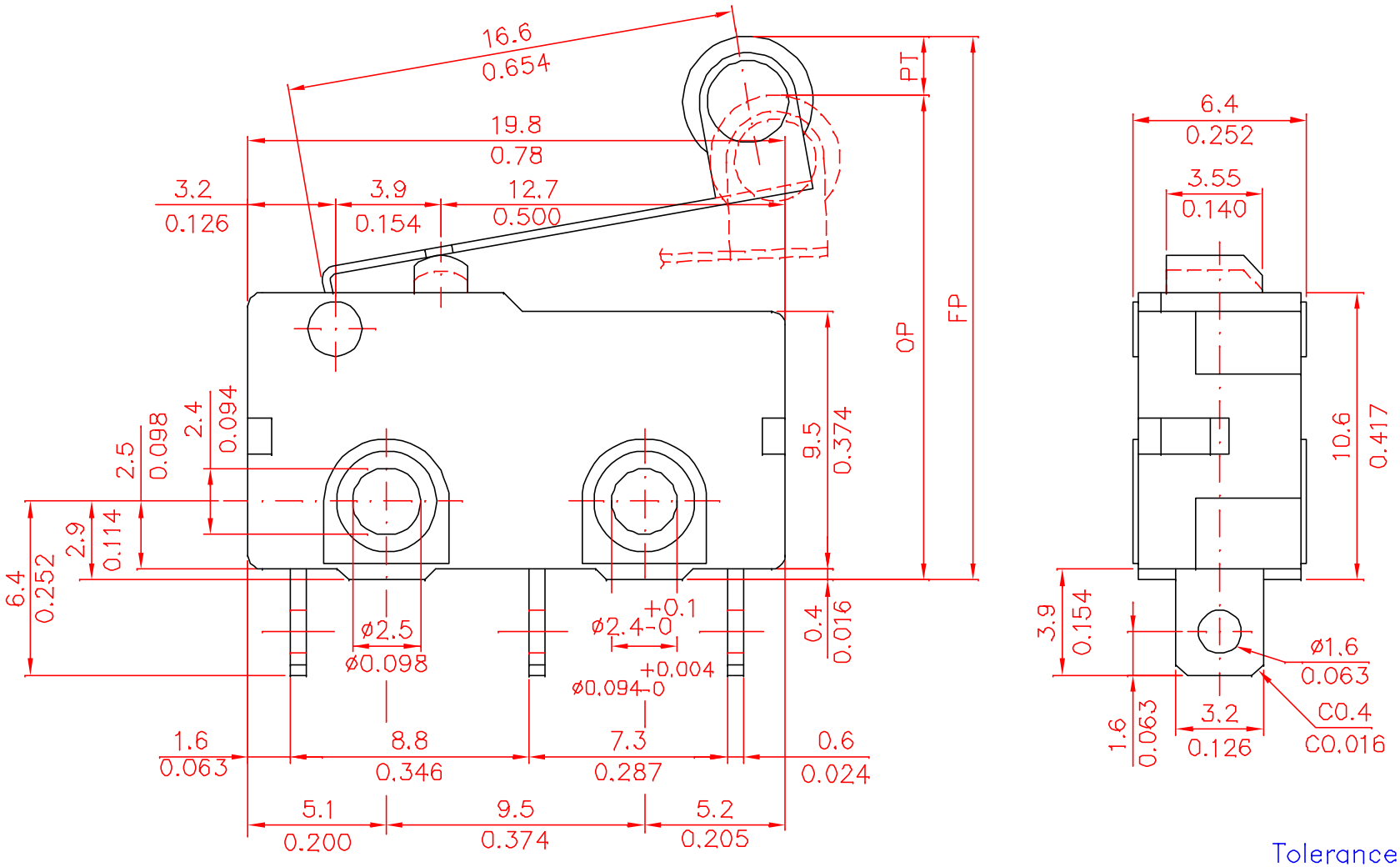

Tolerance ±0.4 mm
±0.016 inch

REV	DATE	APPROVAL	DESIGN	ENGINEERING CHANGE DESCRIPTION	VIEW		SIZE	A4	UNIT	mm/inch
1	JUN 19,2002	Dick	Tiger	ADD INCH UNITS						