Cable - VIP-CAB-FLK50/0,14/0,5M - 2318868

Please be informed that the data shown in this PDF Document is generated from our Online Catalog. Please find the complete data in the user's documentation. Our General Terms of Use for Downloads are valid
(http://phoenixcontact.com/download)

Assembled round cable with two molded 50-pos. socket strips (1:1 connection). The cable has a 90° punched on connector and a 180° punched on connector, cable length: 0.5 m

Why buy this product

- Available in any choice of length
- 26 to 50-pos.
- Individual serial number
- Connector according to IEC 60603-13
- 1:1 connection

Key commercial data

Packing unit	1 pc
GTIN	4 046356 312011
Weight per Piece (excluding packing)	142.2 g
Custom tariff number	85444290
Country of origin	Germany
Note	Made to Order (non-returnable)

Technical data

General

Nominal voltage U_N	< 50 V AC
	60 V DC
Max. current carrying capacity per path	1 A
Max. conductor resistance	0.16 Ω/m
Length of cable	0.5 m
Single wire, cross section	0.14 mm²
AWG	26
Conductor construction: Number of litz wires:	7
Single wire, material	Cu tin-plated

Cable - VIP-CAB-FLK50/0,14/0,5M - 2318868

Technical data

General

External diameter	10.3 mm
Cable, preassembly	Insulation displacement, IEC 60352-4/DIN EN 60352-4
Shielding	no
Outer sheath, material	PVC
External sheath, color	Gray RAL 7035

Environmental conditions

Ambient temperature (operation)	-20 °C ... 50 °C
Ambient temperature (storage/transport)	-20 °C ... 70 °C
Flame resistance	IEC 60332-1
Resistance to oil	UL 1581
Gasoline resistance	Against occasional splashes

Connector, module side

Number of positions	50
Connectors	IDC/FLK socket strip (2.54 mm)
Number of plugs	1

Connector, controller side

Number of positions	50
Connectors	IDC/FLK socket strip (2.54 mm)
Number of plugs	1

Classifications

eCl@ss

eCl@ss 4.0	27060306
eCl@ss 4.1	27060306
eCl@ss 5.0	27061801
eCl@ss 5.1	27061801
eCl@ss 6.0	27061801
eCl@ss 7.0	27061801
eCl@ss 8.0	27249205

ETIM

ETIM 2.0	EC000237
ETIM 3.0	EC000237
ETIM 4.0	EC000237
ETIM 5.0	EC000237

UNSPSC

UNSPSC 6.01	26121620
UNSPSC 7.0901	26121620

Cable - VIP-CAB-FLK50/0,14/0,5M - 2318868

Classifications

UNSPSC

UNSPSC 11	26121620
UNSPSC 12.01	26121620
UNSPSC 13.2	26121620

Approvals

Approvals

Approvals

UL Recognized / cUL Recognized / EAC / cULus Recognized

Ex Approvals

Approvals submitted

Approval details

UL Recognized

cUL Recognized

EAC

cULus Recognized

Drawings

Cable - VIP-CAB-FLK50/0,14/0,5M - 2318868

Dimensioned drawing

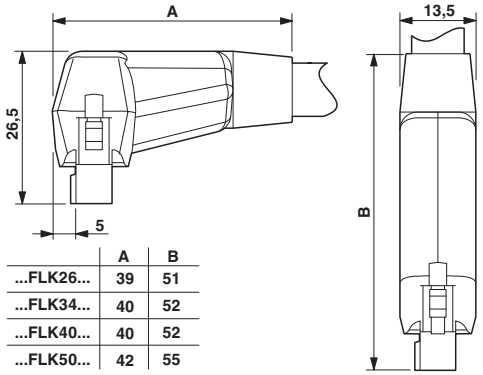

	A	B
...FLK26...	39	51
...FLK34...	40	52
...FLK40...	40	52
...FLK50...	42	55

Phoenix Contact 2015 © - all rights reserved
http://www.phoenixcontact.com