THIS DRAWING IS UNPUBLISHED. RELEASED FOR PUBLICATION -,- .
© COPYRIGHT - By - ALL RIGHTS RESERVED.

LOC	DIST
IR	—

REVISIONS

P	LTR	DESCRIPTION	DATE	DWN	APVD
	H3	REVISED PER ECO-11-005301	02MAR11	RK	HMR

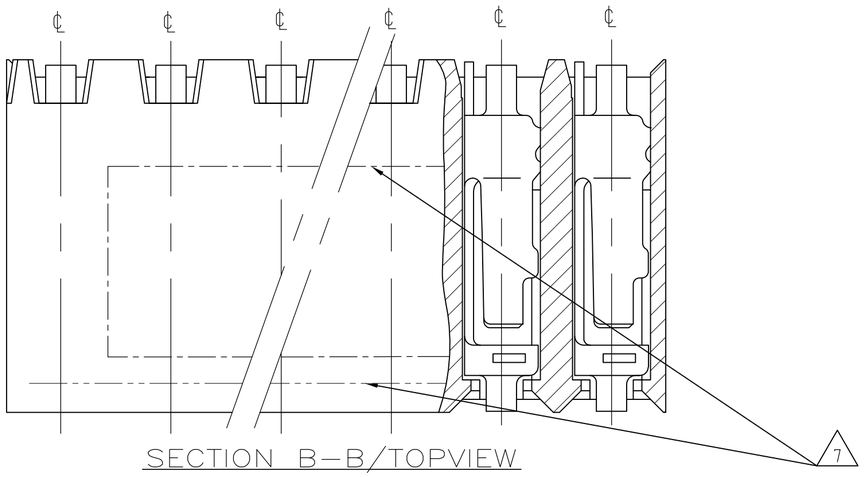

SECTION B-B/TOPVIEW

NOTES:

1. TO DETERMINE DIMENSION TAKE N= NR. OF POS
FOR EXAMPLE, 10 POS., Nx2.54=25.4mm.
FOR ORDER NR. USE BASIC NR. + NR. OF POS.
FOR EXAMPLE, 2 POS.= 216602-2 (SHORTEST VERSION)
65 POS.= 6-216602-5 (LONGEST VERSION)

2. HOUSING MATERIAL, GREEN GLASSFILLED POLYESTER, UL 94V-0
CONTACT MATERIAL, PHOSPHORBRONZE.

3. PLATING, UNDERCOATING, 1.3µm Ni
AT CONT.PLACE, 0.8µm Au
AT SOLDER-TINES, 3.0-5.0µm TIN

4 MATES WITH 0.63 SQUARE/ROUND MODU POSTS

5. CONTACT POINT

6 RECOMMENDED P.C.BOARD THICKNESS 1.6mm

7. PRINTED: BASIC PART NUMBER, THE WORD "AMP", PRODUCTION DATE AND A DASHED LINE OVER THE LENGTH OF HOUSING TO INDICATE CONTACT MATING SIDE

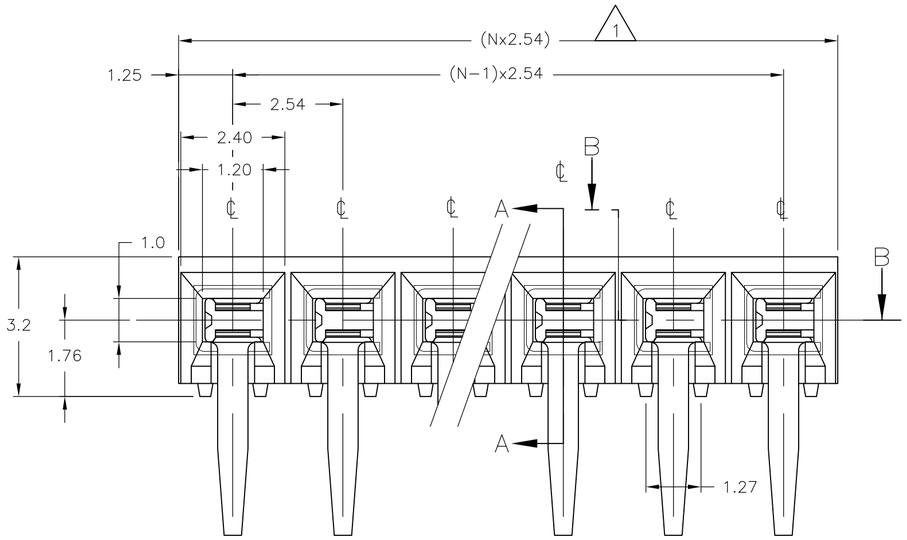

FRONT VIEW

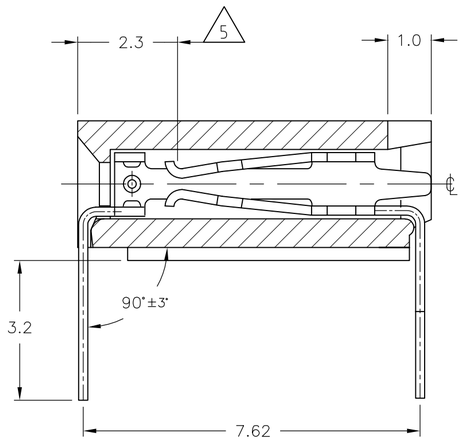

SECTION A-A

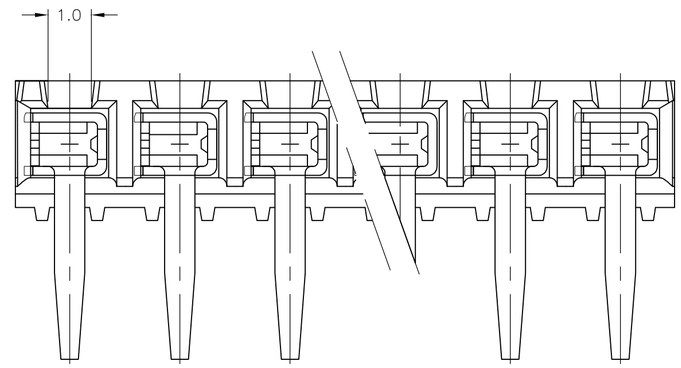

REAR VIEW

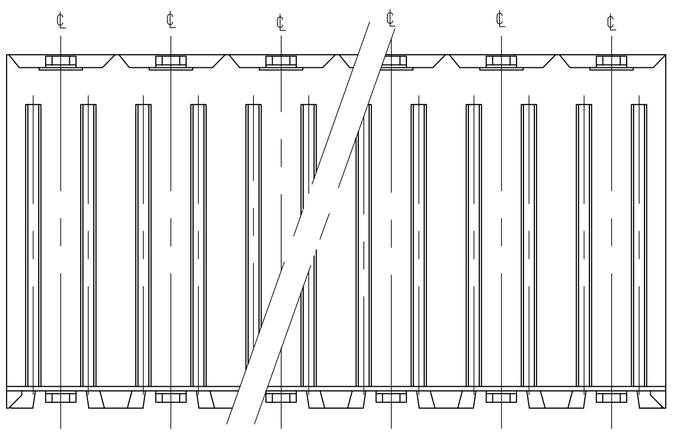

BOTTOM VIEW

RECOMMENDED P.C.BOARD-HOLE LAYOUT

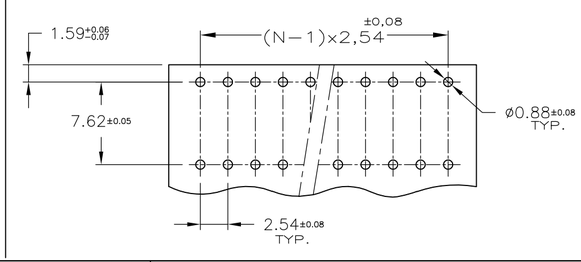

THIS DRAWING IS A CONTROLLED DOCUMENT.		DWN W.R.ANNOKKEE 19/12/91	TE Connectivity
DIMENSIONS: mm	TOLERANCES UNLESS OTHERWISE SPECIFIED: 0 PLC ± - 1 PLC ± - 2 PLC ± - 3 PLC ± - 4 PLC ± - ANGLES ± -	CHK R.T.DE BLIECK 19/12/91	NAME HV 190 HOR. ASS'Y SINGLE ROW GOLD VERSION (MAX. 65 POSITION)
		APVD R.SMEETS 19/12/91	
		PRODUCT SPEC 108-19072	
		APPLICATION SPEC —	SIZE A2 / CAGE CODE 00779 / DRAWING NO C-216602 / RESTRICTED TO —
MATERIAL 2	FINISH 3	WEIGHT —	
CUSTOMER DRAWING			SCALE 10:1 / SHEET 1 OF 1 / REV H3

216602

1471-9 (3/11)