THIS DRAWING IS UNPUBLISHED. RELEASED FOR PUBLICATION -,- .
© COPYRIGHT - By - ALL RIGHTS RESERVED.

LOC	DIST
G	14

REVISIONS

P	LTR	DESCRIPTION	DATE	DWN	APVD
	M1	REVISED PER ECO-11-004820	11MAR11	RK	HMR

AMP WIRE RANGE	Listed	LR7189 Certified
16-14 AWG SOLID OR STRANDED	16-14 AWG SOLID OR STRANDED	16-14 AWG SOLID OR STRANDED

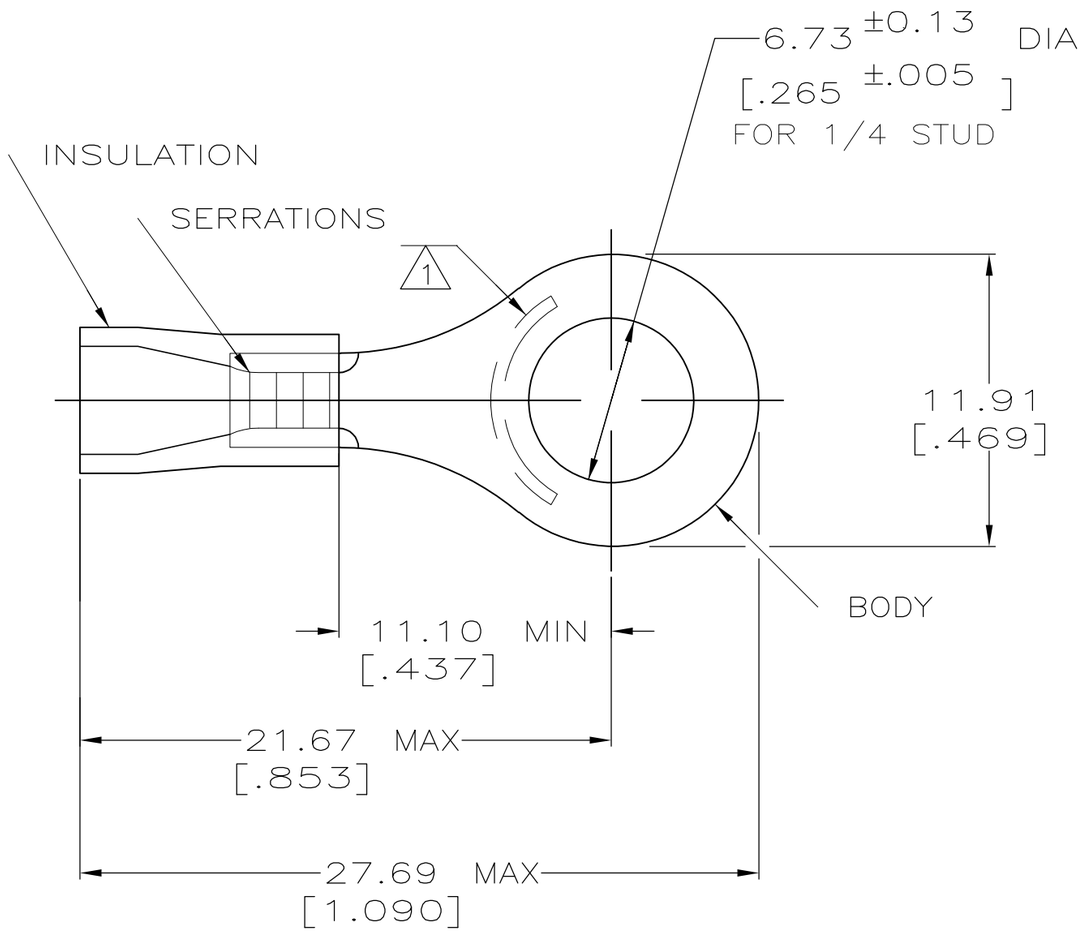

1. STAMP AMP 16-14* APPROX AS SHOWN
2. WIRE INSULATION DIA: 3.00-4.90 [.118-.193]
3. TONGUE MATERIAL THK: $0.79^{\pm 0.05}$ [$.031^{\pm .002}$]
4. MATERIAL: BODY - CU PER ASTM B152
   SLEEVE - PVC, COLOR - BLUE
5. MATERIAL: BODY - CU PER ASTM B152
   SLEEVE - PVC, COLOR - BLACK
6. REPLACED BY 8-34162-1

	QTY	PACKAGE TYPE		PART NO.
OBSOLETE	25	LOOSE PC,BAG	4	8-34162-5 6
	100	LOOSE PC,BOX	4	8-34162-1
	4000	ON TAPE, REEL	5	2-34162-3
	-	LOOSE PIECE	5	2-34162-2
	4000	ON TAPE, REEL	4	2-34162-1
	-	LOOSE PIECE	4	34162

AMP INCORPORATED
CUSTOMER SERVICE SYSTEMS

FOR ADDITIONAL PRODUCT INFORMATION OR COPIES OF DRAWINGS AND TECHNICAL DOCUMENTS	PRODUCT INFORMATION CENTER 1-800-522-6752
FOR APPLICATION TOOLING INFORMATION	TOOLING ASSISTANCE CENTER 1-800-722-1111
FOR ORDER ENTRY	1-800-526-5142

THIS DRAWING IS A CONTROLLED DOCUMENT FOR AMP INCORPORATED. IT IS SUBJECT TO CHANGE AND THE CONTROLLING ENGINEERING ORGANIZATION SHOULD BE CONTACTED FOR THE LATEST REVISION.

MAX RECOMMENDED OPERATING TEMPERATURE: 105°C [221° F]

VOLTAGE RATING: N/A

CIRCULAR MIL AREA: 1.04-2.62mm² [2,050-5,180] SOLID OR STRANDED

THIS DRAWING IS A CONTROLLED DOCUMENT.

DIMENSIONS: MM [INCHES]

TOLERANCES UNLESS OTHERWISE SPECIFIED:
0 PLC ± -
1 PLC ± -
2 PLC ± 0.20[.008]
3 PLC ± -
4 PLC ± -
ANGLES ± -

MATERIAL: SEE NOTES

FINISH: TIN PER ASTM B545

DWN	DK SCHRUM	08/06/92
CHK	RE HERSEY	11/10/92
APVD	M ELLIS	11/10/92
PRODUCT SPEC	108-1034	
APPLICATION SPEC	NOT AVAILABLE	
WEIGHT	-	

TE Connectivity

NAME: TERMINAL, RING TONGUE, PLASTI-GRIP -

SIZE	CAGE CODE	DRAWING NO	RESTRICTED TO
A3	00779	C-34162	-

CUSTOMER DRAWING | SCALE 4:1 | SHEET 1 OF 1 | REV M1

1470-19 (3/11)