FIBOX EURONORM II AB

120 X 200 X 75

FIBOX

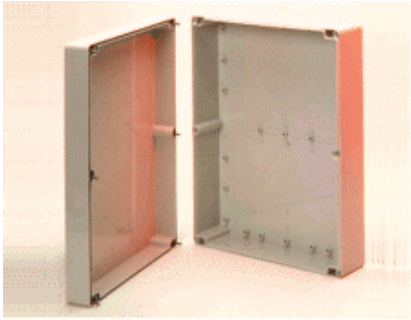

This is a sample photo.

ORDER SYMBOL: AB 122008

EL.number **EAN:** 6418074003553

Sweden:

Denmark: 8212003525

Finland: 3423488

INCLUDING:

Enclosure body, cover with PUR gasket, cover screws, and mounting screws.

APPROVALS:

USA: NEMA 4, 4X, 6, 12, 13; UL 94-HB

EURO: IP 67/IP 66; UL 94-HB

OTHERS: IEC 529, CE, EEI

FIBOX EURONORM II AB

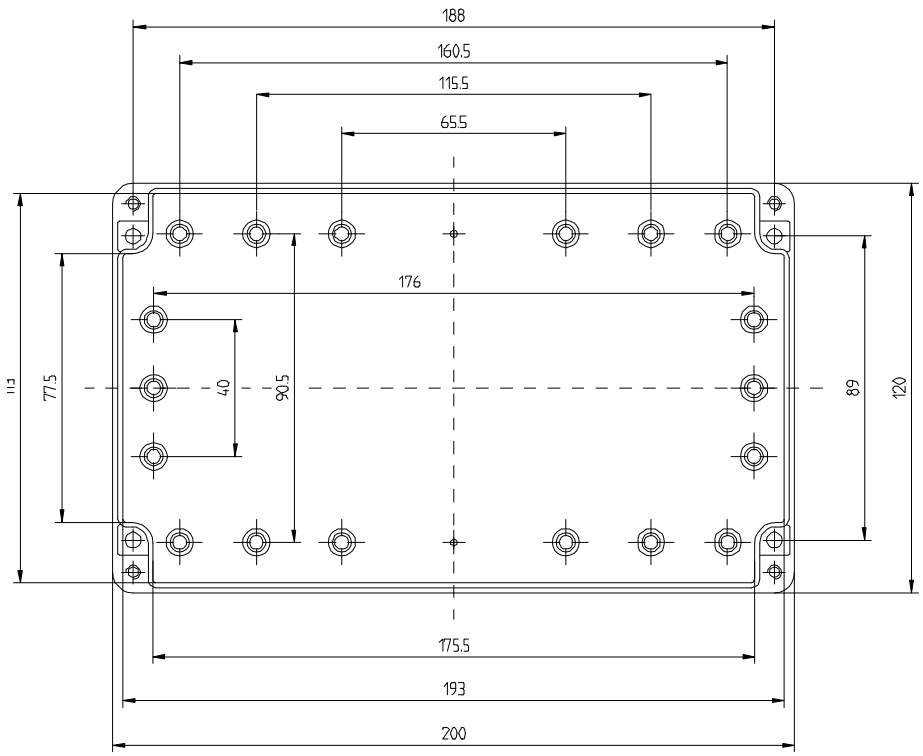

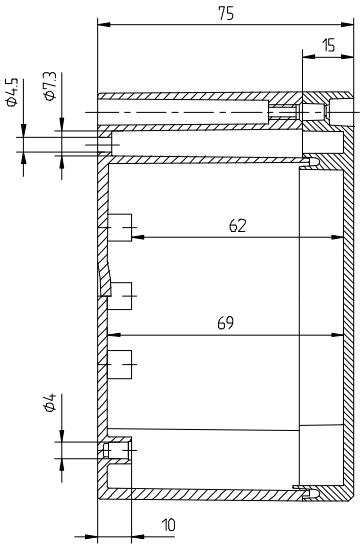

TECHNICAL INFORMATION:

Standard colour:

Ingress protection:

Flame resistance:

Temp.range in cont. use:

Temp. range of material:

ACCESSORIES

Fastening lug	TF 28037	DIN-Rail	TRM 0812
DIN-Rail	TRH 1212	DIN-Rail	TRM 0816
DIN-Rail	TRH 1216	DIN-Rail	TRM 1212
DIN-Rail	TRH 1220		
DIN-Rail	TRH 1520		
DIN-Rail	TRH 2330		
DIN-Rail	TRH 24		
DIN-Rail	TRM 0507		
DIN-Rail	TRM 0808		

(c) FIBOX Oy Data subject to change without notice.