Dec.1.2017 Copyright 2017 HIROSE ELECTRIC CO., LTD. All Rights Reserved.

	COUNT	DESCRIPTION OF REVISIONS	BY	CHKD	DATE		COUNT	DESCRIPTION OF REVISIONS	BY	CHKD	DATE
△					. .	△					. .
△					. .	△					. .
△					. .	△					. .

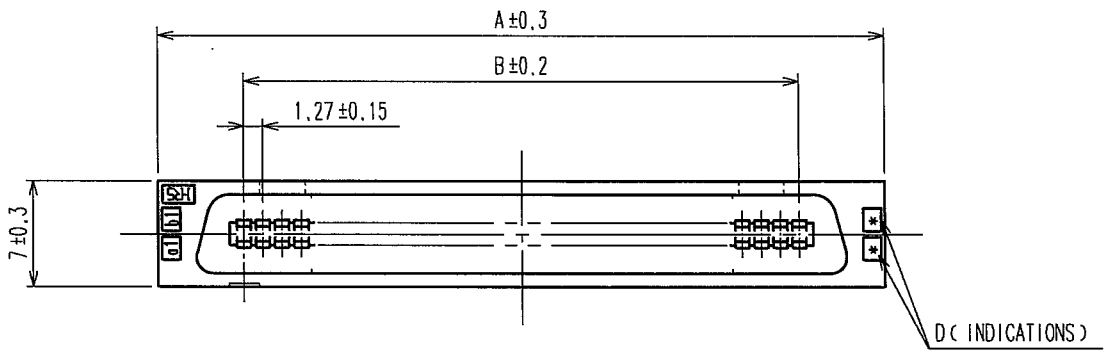

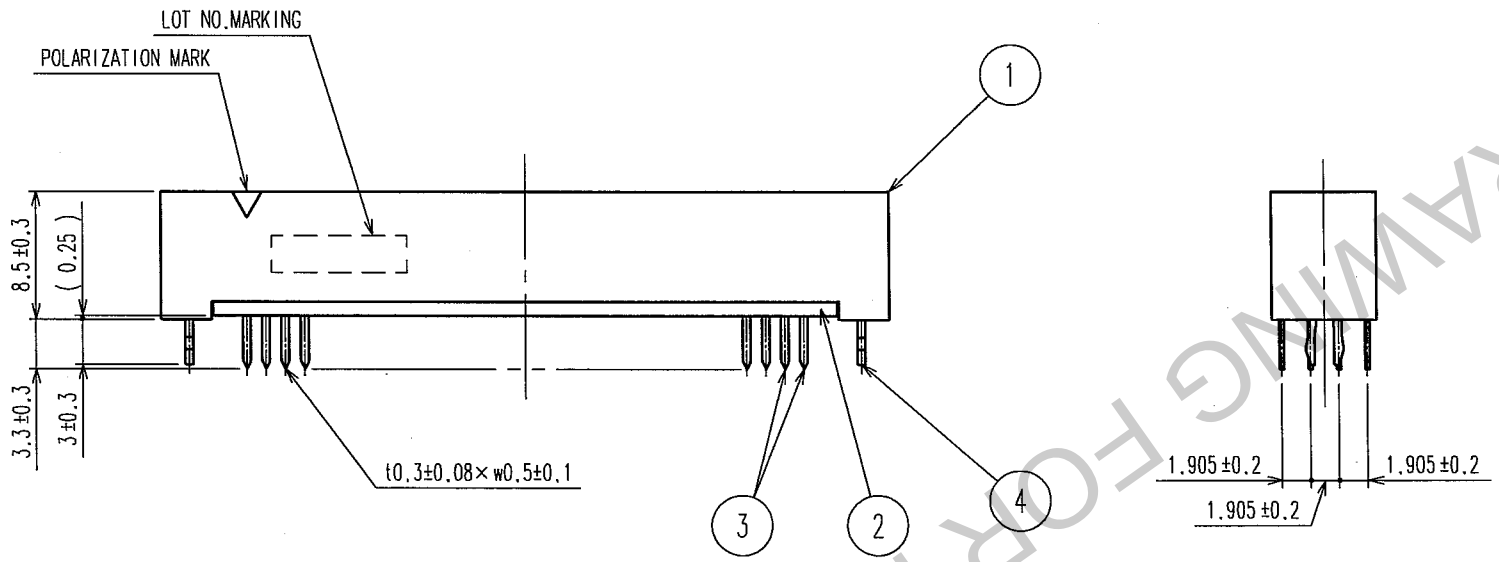

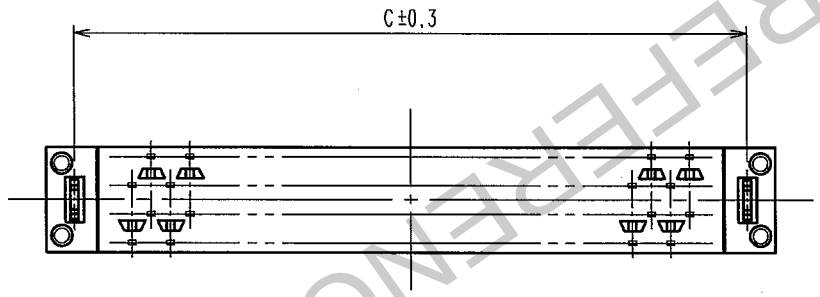

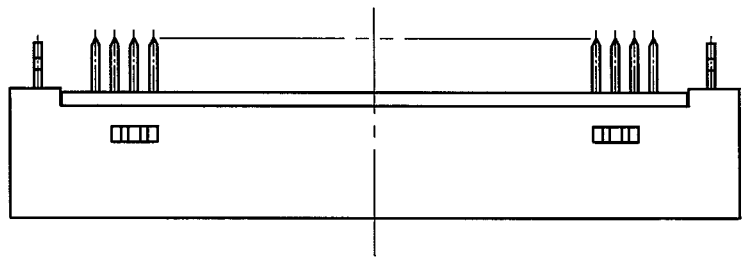

RECOMMENDEND PC BOARD HOLE PATTERN(MOUNTING SIDE)
t=1.6

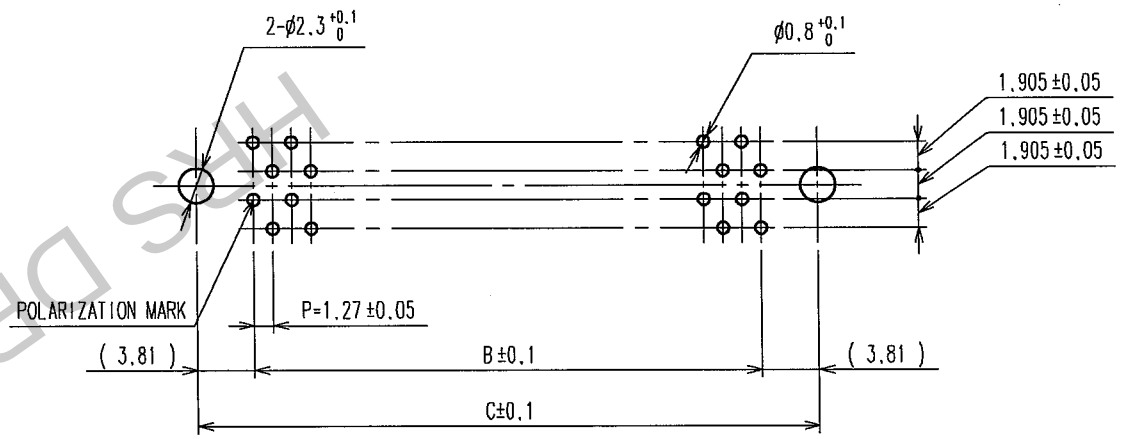

PART No.	CODE No.	2	A	B	C	D
FX2CA-20P-1.27DSAL(71)	CL572-2351-0-71	20	22.75	11.43	19.05	10
FX2CA-32P-1.27DSAL(71)	CL572-2352-3-71	32	30.37	19.05	26.67	16
FX2CA-40P-1.27DSAL(71)	CL572-2353-6-71	40	35.45	24.13	31.75	20
FX2CA-52P-1.27DSAL(71)	CL572-2354-9-71	52	43.07	31.75	39.37	26
FX2CA-60P-1.27DSAL(71)	CL572-2355-1-71	60	48.15	36.83	44.45	30
FX2CA-68P-1.27DSAL(71)	CL572-2356-4-71	68	53.23	41.91	49.53	34
FX2CA-80P-1.27DSAL(71)	CL572-2357-7-71	80	60.85	49.53	57.15	40
FX2CA-100P-1.27DSAL(71)	CL572-2358-0-71	100	73.55	62.23	69.85	50
FX2CA-120P-1.27DSAL(71)	CL572-2359-2-71	120	86.25	74.93	82.55	60

NOTES 1. THE DIMENSIONS IN PARENTHESES ARE FOR REFERENCE.
2 NUMBER OF PIN.

HRS DRAWING FOR REFERENCE

NO.	MATERIAL	FINISH, REMARKS
4	PHOSPHOR BRONZE	TIN-PLATING
1,2	POLYAMIDE	BLACK UL94V-0

NO.	MATERIAL	FINISH, REMARKS
3	PHOSPHOR BRONZE	CONTACT AREA:GOLD 0.2μm min DIP AREA:TIN-PLATING 2μm min UNDER PLATING:NICKEL 2μm min

CODE NO.(OLD)	DRAWN	DESIGNED	CHECKED	APPROVED	RELEASED
CL	I.OKAYAMA	K.NAKAMURA	H.OKAWA	H.OKAWA	
	04.06.02	04.06.02	04.06.09	04.06.09	. .

SCALE FREE	DRAWING NO. EDC3-083052-21	PART NO. FX2CA-**P-1.27DSAL(71)
UNITS mm	HRS HIROSE ELECTRIC CO., LTD	CODE NO. CL572 1/1

TO
PCK