THIS DRAWING IS UNPUBLISHED. RELEASED FOR PUBLICATION -,- .
© COPYRIGHT - By - ALL RIGHTS RESERVED.

| LOC | DIST |
|---|---|
| G | 02 |

REVISIONS

| P | LTR | DESCRIPTION | DATE | DWN | APVD |
|---|---|---|---|---|---|
| | H2 | REVISED PER ECO-11-005027 | 11MAR11 | RK | HMR |

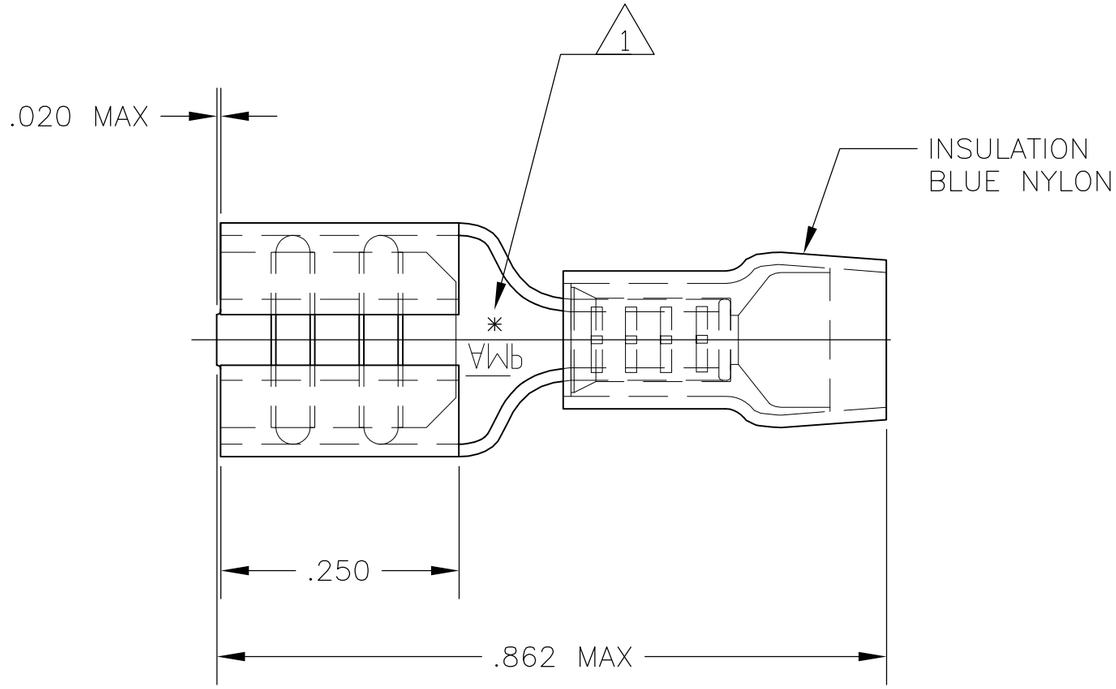


1. ASTERISK * FOR PHOS BRONZE ITEMS ONLY.
2. MATES WITH A .031 THK TAB

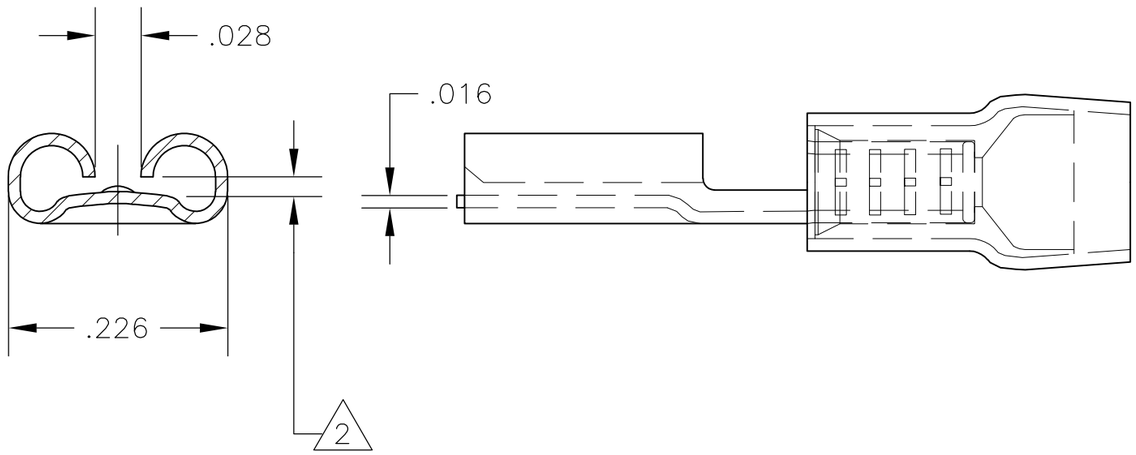


| | | |
|---|---|---|
| 9-160479-5 ON TAPE | | 5-160479-5 |
| 9-160479-2 ON TAPE | | 5-160479-2 |
| TIN | PHOS BRONZE | 9-160479-5 |
| TIN | BRASS | 9-160479-2 |
| FINISH | MATERIAL | ORDER NO. |

THIS DRAWING IS A CONTROLLED DOCUMENT.

DIMENSIONS: INCHES

TOLERANCES UNLESS OTHERWISE SPECIFIED:
0 PLC ± -
1 PLC ± -
2 PLC ± -
3 PLC ± .005
4 PLC ± -
ANGLES ± 5°

MATERIAL -
FINISH -

DWN jr ruth 21MAY04
CHK T MICHIELUTTI 21MAY04
APVD T MICHIELUTTI 21MAY04
PRODUCT SPEC —
APPLICATION SPEC —
WEIGHT —

TE Connectivity

NAME
FASTON RECEPTACLE, PIDG
.187 SERIES
WIRE SIZE: 16-14 AWG

| SIZE | CAGE CODE | DRAWING NO | RESTRICTED TO |
|---|---|---|---|
| A3 | 00779 | C-160479 | — |

CUSTOMER DRAWING | SCALE 1:1 | SHEET 1 OF 1 | REV H2