Alle Rechte vorbehalten/ *All rights reserved*

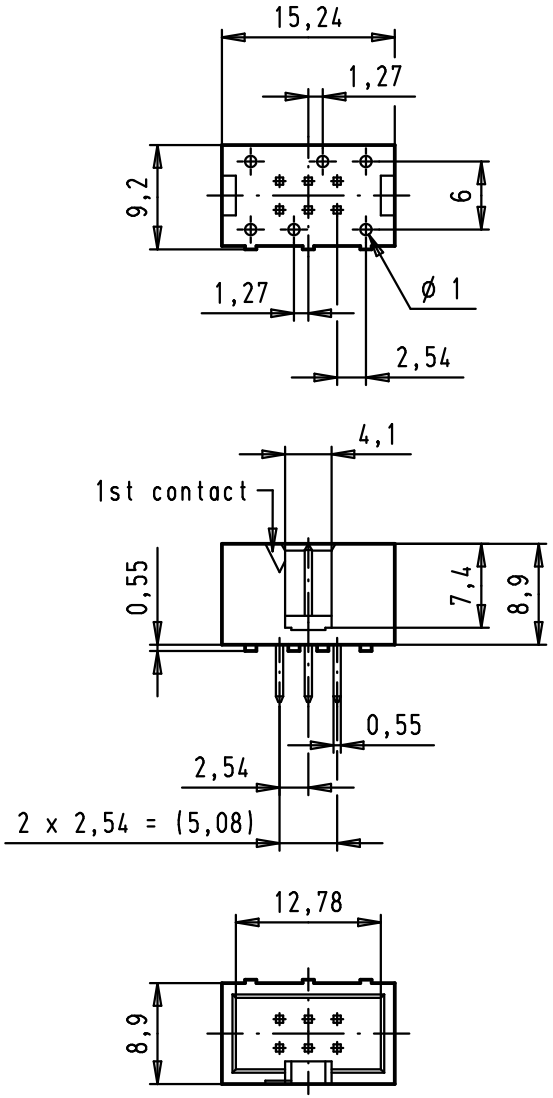

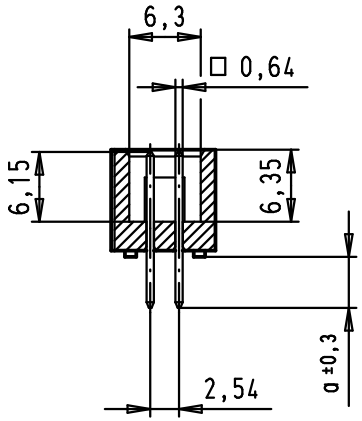

PCB layout, component side

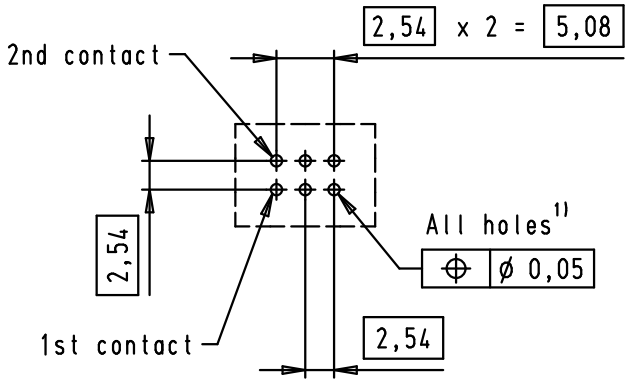

1) Solder pins for PCB connections ø1±0,1 according to IEC 60326-3

09 18 506 7322	PL3	4,5
09 18 506 6322	PL2	4,5
09 18 506 5322	0,76 µm Au	4,5
09 18 506 7324	PL3	2,9
09 18 506 6324	PL2	2,9
09 18 506 5324	0,76 µm Au	2,9
Part number	Performance level	a

				Dat.	Name
			Detail.	01/02/00	JB
EC00811	11/09/09	PK	Insp.		
29778	25/04/02	CV	Stand.		
27931	15/06/00	JB			
26570	01/02/00	JB			
Mod.	Dat.	Name			

All Dim. in mm
Orig. Size DIN A 4

HARTING EURL
F-95972 Paris

SEK 18 Connector
Male, low profile,
6 poles, straight pins

Maßstab/ *Scale* 1,5:1

TB 09 18 506 X32X

Sub.

Blatt/ *Page* 1/2