THIS DRAWING IS UNPUBLISHED. RELEASED FOR PUBLICATION -,- .

© COPYRIGHT - BY TYCO ELECTRONICS CORPORATION. ALL RIGHTS RESERVED.

LOC	DIST
A	40

REVISIONS

P	LTR	DESCRIPTION	DATE	DWN	APVD
	C	ECN 0150-0025-04	09JAN04	RAS	RLS

PART NUMBER	REV	FIRST USED	WITH BLADE PART NUMBER	BLADE TYPE
1375308-1	C	-	1375309-1	110
1375308-2	C	-	NO BLADE	-
1375308-3	C	-	1725872-1	66
1375308-4	C	-	1375310-1	110/66

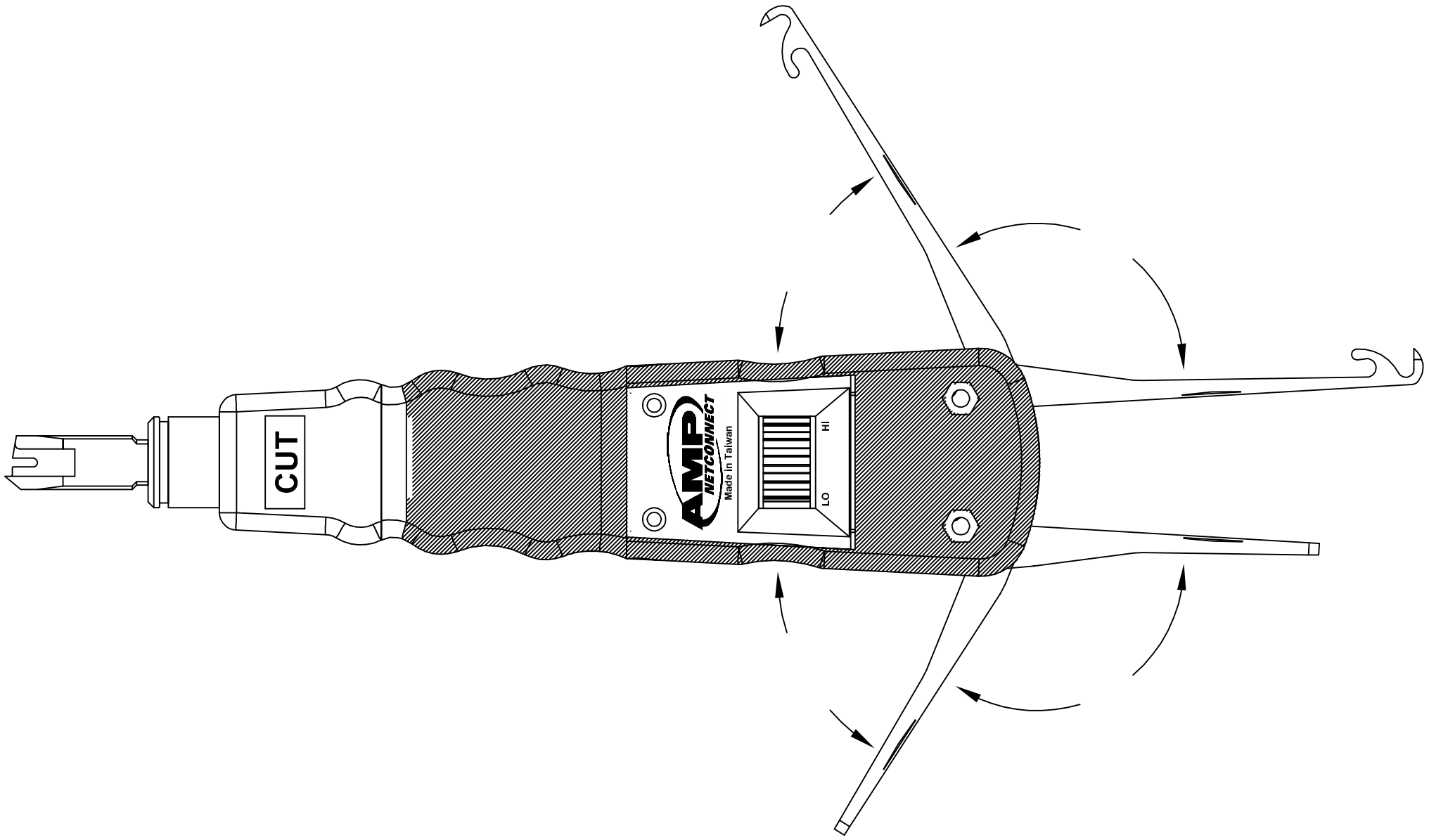

THIS DRAWING IS A CONTROLLED DOCUMENT.

DIMENSIONS: INCHES

TOLERANCES UNLESS OTHERWISE SPECIFIED:

0 PLC	± -
1 PLC	± -
2 PLC	± .02
3 PLC	± -
4 PLC	± -
ANGLES	± -

MATERIAL: -

FINISH: -

DWN R. SMELTZ 09JAN2004

CHK D. MEYER 09JAN2004

APVD R. SCHAEFFER 09JAN2004

PRODUCT SPEC -

APPLICATION SPEC -

WEIGHT -

AMP Tyco Electronics Corporation Harrisburg, Pa. 17105

NAME TOOL, IMPACT, W/BLADE, D914S, XC, 110 CONNECT - -

SIZE	CAGE CODE	DRAWING NO	RESTRICTED TO
A3	00779	C-1375308	-

CUSTOMER DRAWING

SCALE 1:1 SHEET 1 OF 1 REV C

AMP 1470-19 REV 31MAR2000

H:\US007945DMTMOD\C-0025-