THIS DRAWING IS UNPUBLISHED. RELEASED FOR PUBLICATION -,- .
© COPYRIGHT - By - ALL RIGHTS RESERVED.

LOC	DIST
G	14

REVISIONS

P	LTR	DESCRIPTION	DATE	DWN	APVD
	P2	REVISED PER ECO-11-004587	11MAR11	RK	HMR

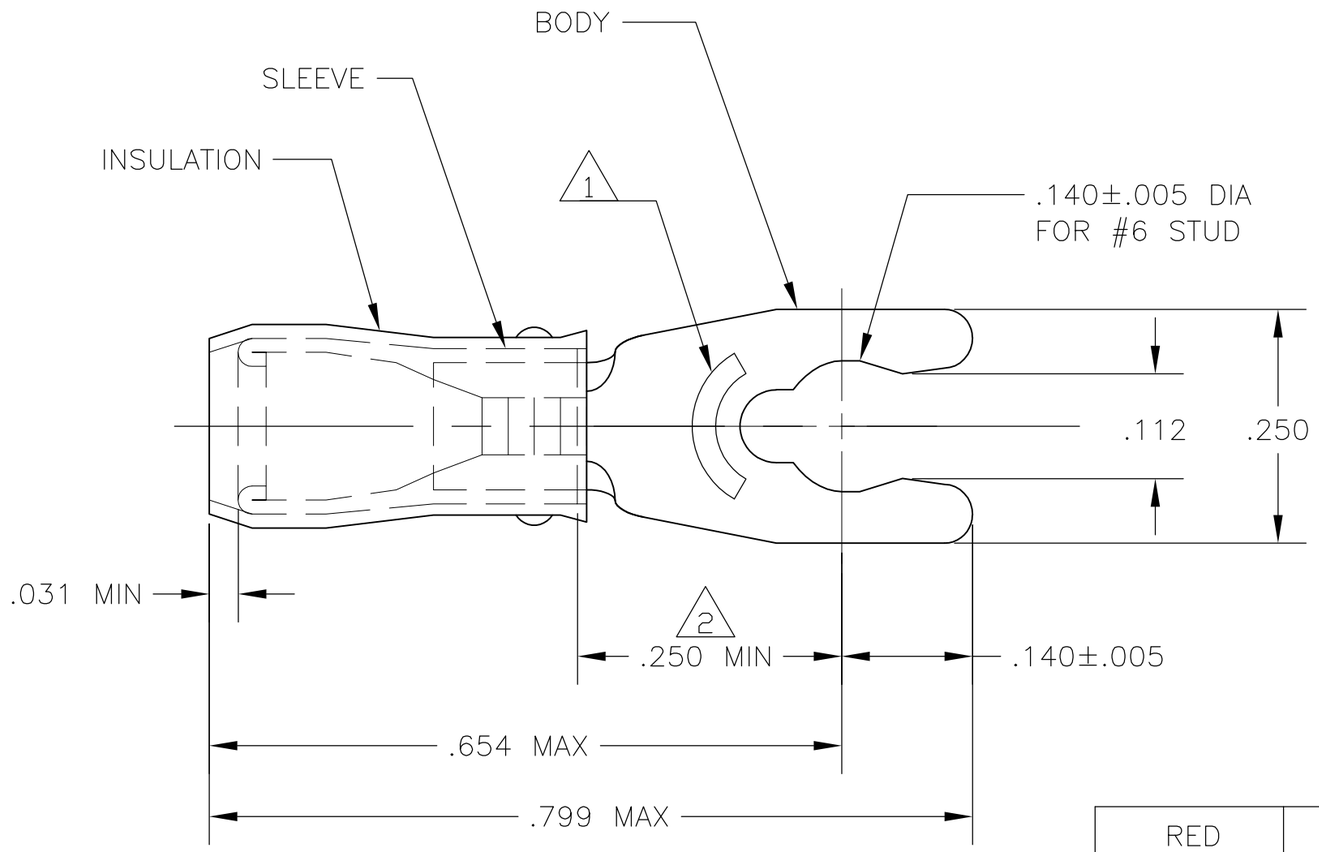

1. STAMP 6S AMP 22-18*, APPROX AS SHOWN. 22-16 TERMINALS ARE STAMPED 22-18 IN ACCORDANCE WITH MILITARY SPEC MIL-T-7928, COMMERCIAL WIRE RANGE IS 22-16.

2. APPLIES FROM EDGE OF METAL WIRE BARREL TO CENTER OF STUD HOLE.

3. TONGUE MATERIAL THK IS .031±.002

4. BODY - PHOS BRONZE PER ASTM B-103
SLEEVE - COPPER PER ASTM B-152
INSULATION - NYLON

5. BODY - TIN PLATE PER ASTM B545
SLEEVE - TIN PLATE PER ASTM B545
INSULATION - SEE TABLE

AMP WIRE RANGE	Listed FILE E13288	LR7189 Certified
22-16 AWG SOLID OR STRANDED	22-16 AWG SOLID OR STRANDED	22-16 AWG SOLID OR STRANDED

INSULATION COLOR	WIRE INSULATION OD	QTY	PACKAGE TYPE	PART NO
RED	.080-.125	100	LOOSE PIECE, BOX	8-52929-1
BLACK	.080-.125	5000	ON TAPE, REEL	1-52929-0
RED	.105-.140	5000	ON TAPE, REEL	52929-3
RED	.080-.125	5000	ON TAPE, REEL	52929-1
RED	.080-.125	1000	LOOSE PIECE	52929

CUSTOMER SERVICE SYSTEMS

FOR ADDITIONAL PRODUCT INFORMATION OR COPIES OF DRAWINGS AND TECHNICAL DOCUMENTS	PRODUCT INFORMATION CENTER 1-800-522-6752
FOR APPLICATION TOOLING INFORMATION	TOOLING ASSISTANCE CENTER 1-800-722-1111
FOR ORDER ENTRY	1-800-526-5142

MAX RECOMMENDED OPERATING TEMPERATURE: 105°C

VOLTAGE RATING: 300 V MAX

CIRCULAR MIL AREA: 0.26-1.65mm² [509-3260] SOLID OR STRANDED

THIS DRAWING IS A CONTROLLED DOCUMENT FOR AMP INCORPORATED. IT IS SUBJECT TO CHANGE AND THE CONTROLLING ENGINEERING ORGANIZATION SHOULD BE CONTACTED FOR THE LATEST REVISION.

THIS DRAWING IS A CONTROLLED DOCUMENT.

DIMENSIONS: INCHES

TOLERANCES UNLESS OTHERWISE SPECIFIED:
0 PLC ± -
1 PLC ± -
2 PLC ± -
3 PLC ± .008
4 PLC ± -
ANGLES ± 5°

MATERIAL - 4

FINISH - 5

DWN	jr ruth	01MAY07
CHK	T MICHIELUTTI	01MAY07
APVD	T MICHIELUTTI	01MAY07
PRODUCT SPEC	—	
APPLICATION SPEC	—	
WEIGHT	—	

TE Connectivity

NAME: TERMINAL, SHORT SPRING SPADE, PIDG, WIRE SIZE: 22-16 AWG
—

SIZE	CAGE CODE	DRAWING NO	RESTRICTED TO
A3	00779	C-52929	—

CUSTOMER DRAWING | SCALE 6:1 | SHEET 1 OF 1 | REV P2

1470-19 (3/11)