Alle Rechte vorbehalten/ *All rights reserved*

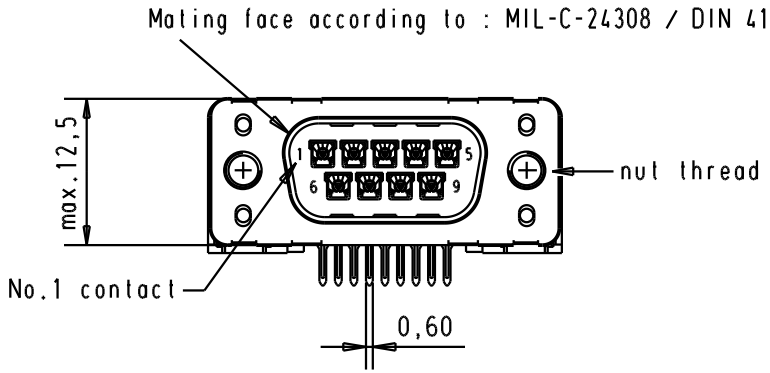

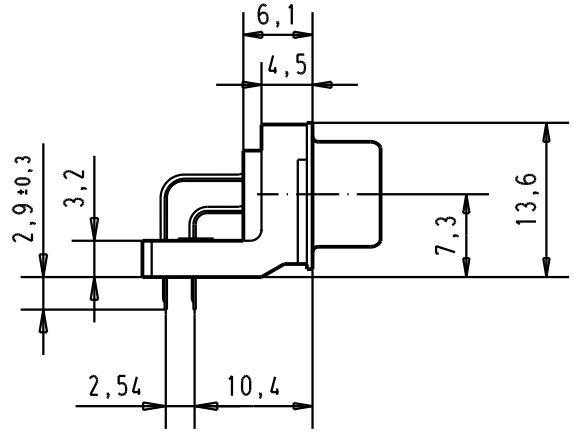

Printed board layout
component side

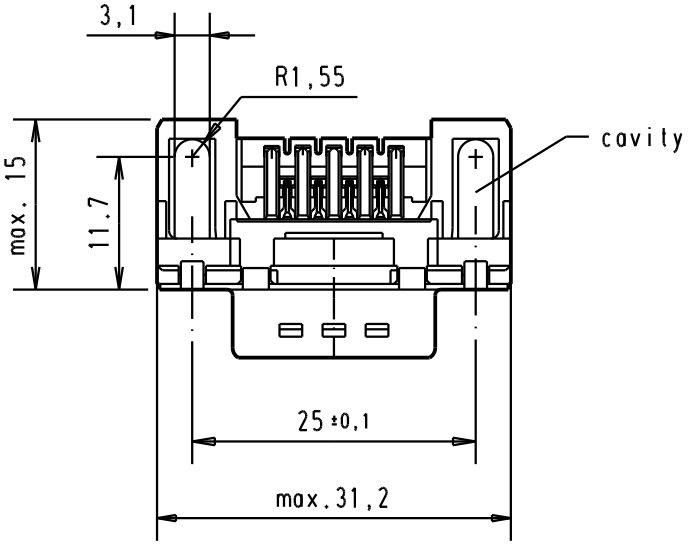

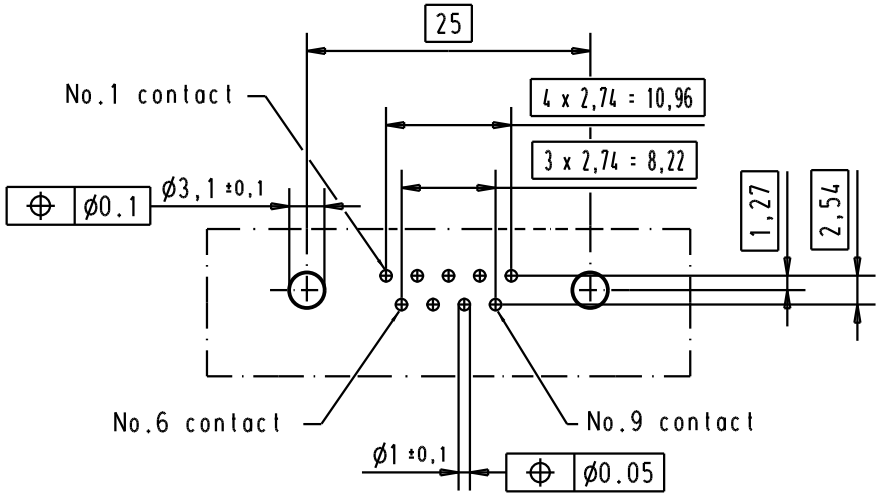

Part number	Nut thread	Performance level	Mod.	Dat.	Name
09 65 122 3801	M3	1			
09 65 122 6801	M3	2			
09 65 122 7801	M3	3	31892	22/04/04	JH
09 65 122 3802	4-40 UNC	1	29773	18-APR-02	CV
09 65 122 6802	4-40 UNC	2	29689	02/07/01	AA
09 65 122 7802	4-40 UNC	3	27960	11/dec/00	ALSPACE

	Dat.	Name
Detail.	11/dec/00	ALSPACE
Insp.		
Stand.		

All Dim. in mm
Orig. Size DIN A 4

D-Sub, male, standard angle, 09 poles, solder pin with nut, hole

Maßstab/ *Scale* 1.5:1

HARTING EURL
F-95972 Paris

TB 0965122x80x

Sub.

Blatt/ *Page* 2