DRAWING FOR REFERENCE: This is subject to change without notice
08/11/2012

HRS DRAWING FOR REFERENCE

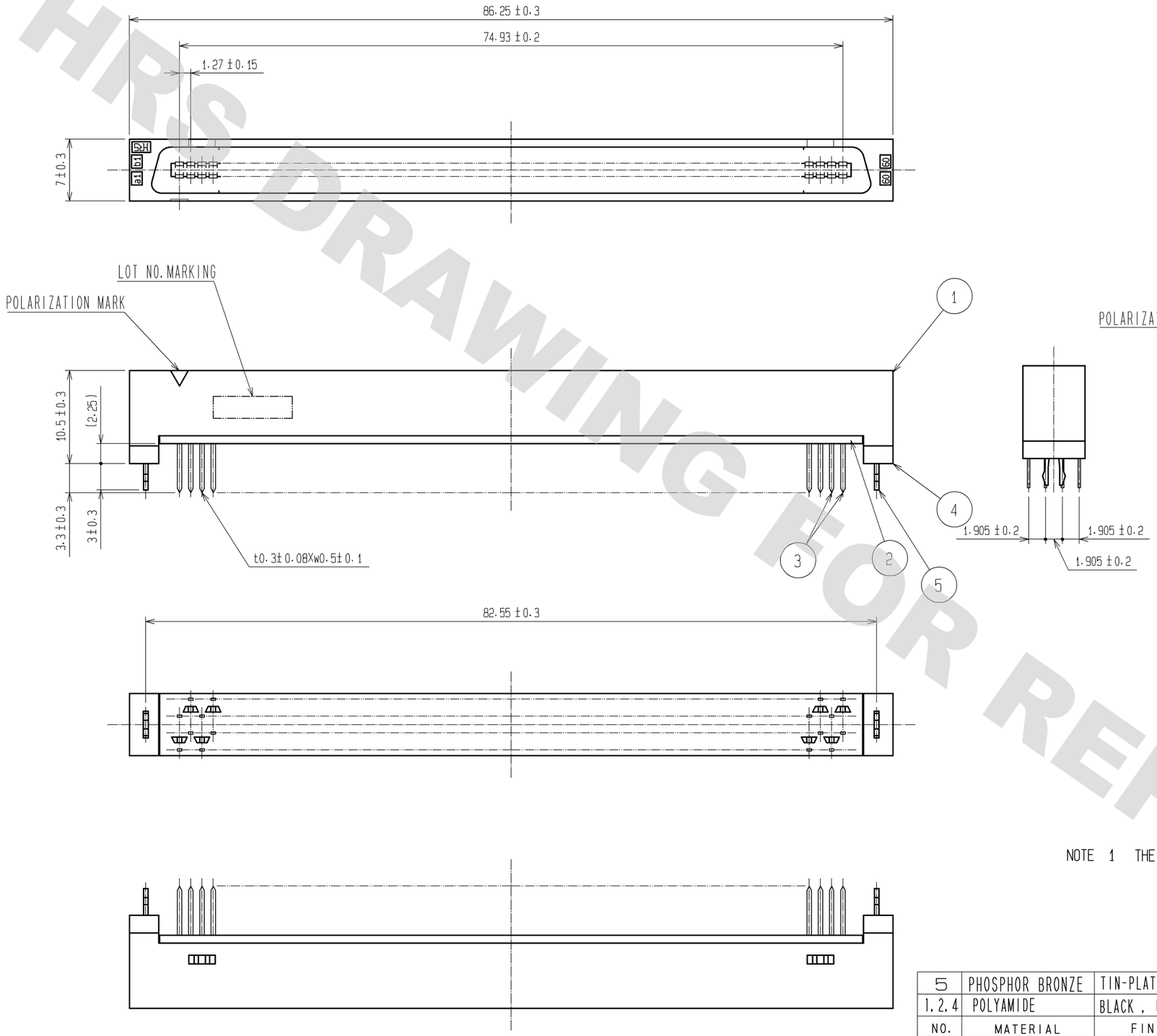

RECOMMENDED PC BOARD HOLE PATTERN
(MOUNTING SIDE) t=1.6 (FREE)

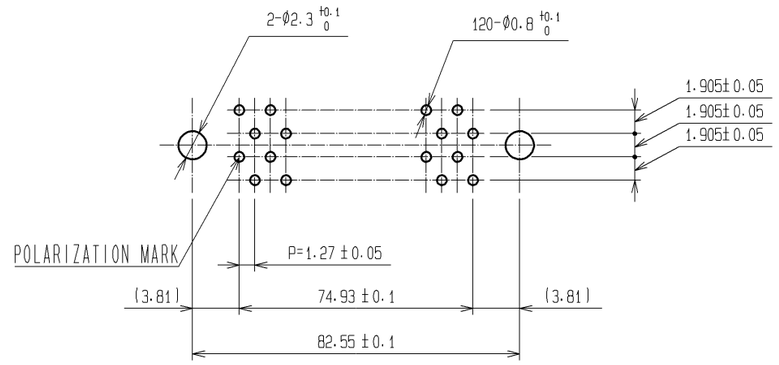

NOTE 1 THE DIMENSIONS IN PARENTHESES ARE FOR REFERENCE.

NO.	MATERIAL	FINISH , REMARKS
5	PHOSPHOR BRONZE	TIN-PLATING
1, 2, 4	POLYAMIDE	BLACK , UL94V-0

NO.	MATERIAL	FINISH , REMARKS
3	PHOSPHOR BRONZE	CONTACT AREA : GOLD 0.2μm min. DIP AREA : TIN-PLATING 2μm min. UNDER PLATING : NICKEL 2μm min.

UNITS	SCALE	COUNT	DESCRIPTION OF REVISIONS	DESIGNED	CHECKED	DATE
mm	2 : 1					

HRS HIROSE ELECTRIC CO., LTD.

APPROVED	: HS. OKAWA	07. 08. 08
CHECED	: HS. OZAWA	07. 08. 07
DESIGNED	: KY. NAKAMURA	07. 08. 07
DRAWN	: TP. MATSUMOTO	07. 08. 06

DRAWING NO.	EDC3-082543-21
PART NO.	FX2CA2-120P-1.27DSAL(71)
CODE NO.	CL572-2379-0-71

1/1

FORM NO. 229-1