KEMET Part Number: R73UN1470SE00J

R73, Film, Film/Foil Polypropylene, Automotive Grade, 4700 pF, 5%, 2000 VDC, 85°C, Lead Spacing = 22.5mm

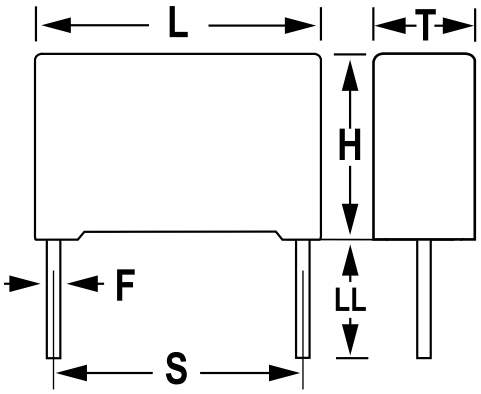

General Information	
Supplier:	KEMET
Series:	R73
Dielectric:	Film/Foil Polypropylene
Style:	Radial
Features:	Automotive Grade, Pulse
RoHS:	Yes
Lead:	Cut
Qualifications:	AEC-Q200
AEC-Q200:	Yes
Miscellaneous:	Above 85C DC And AC Voltage Derating Is 1.25%/C

Dimensions	
L	26.5mm +0.3mm
H	16mm +0.1mm
T	7mm +0.2mm
S	22.5mm +/-0.4mm
LL	4mm +2mm
F	0.8mm +/-0.05mm

Specifications	
Capacitance:	4700 pF
Capacitance Tolerance:	5%
Voltage AC:	500 VAC
Voltage DC:	2000 VDC
Temperature Range:	-55/+105C
Rated Temperature:	85°C
Dissipation Factor:	0.03% 1kHz, 0.04% 10kHz, 0.10% 100kHz
Insulation Resistance:	100 GOhms
Max dV/dt:	11000 V/us
Inductance:	18 nH

Packaging Specifications	
Packaging:	Bulk, Bag
Packaging Quantity:	700

Statements of suitability for certain applications are based on our knowledge of typical operating conditions for such applications, but are not intended to constitute - and we specifically disclaim - any warranty concerning suitability for a specific customer application or use. This Information is intended for use only by customers who have the requisite experience and capability to determine the correct products for their application. Any technical advice inferred from this Information or otherwise provided by us with reference to the use of our products is given gratis, and we assume no obligation or liability for the advice given or results obtained.

© 2006 - 2019 KEMET