THIS DRAWING IS UNPUBLISHED. RELEASED FOR PUBLICATION -,- .
© COPYRIGHT - BY TYCO ELECTRONICS CORPORATION. ALL RIGHTS RESERVED.

LOC	DIST
G	14

REVISIONS

P	LTR	DESCRIPTION	DATE	DWN	APVD
	G1	REV PER ECR 07-003957	20FEB07	JR	TM

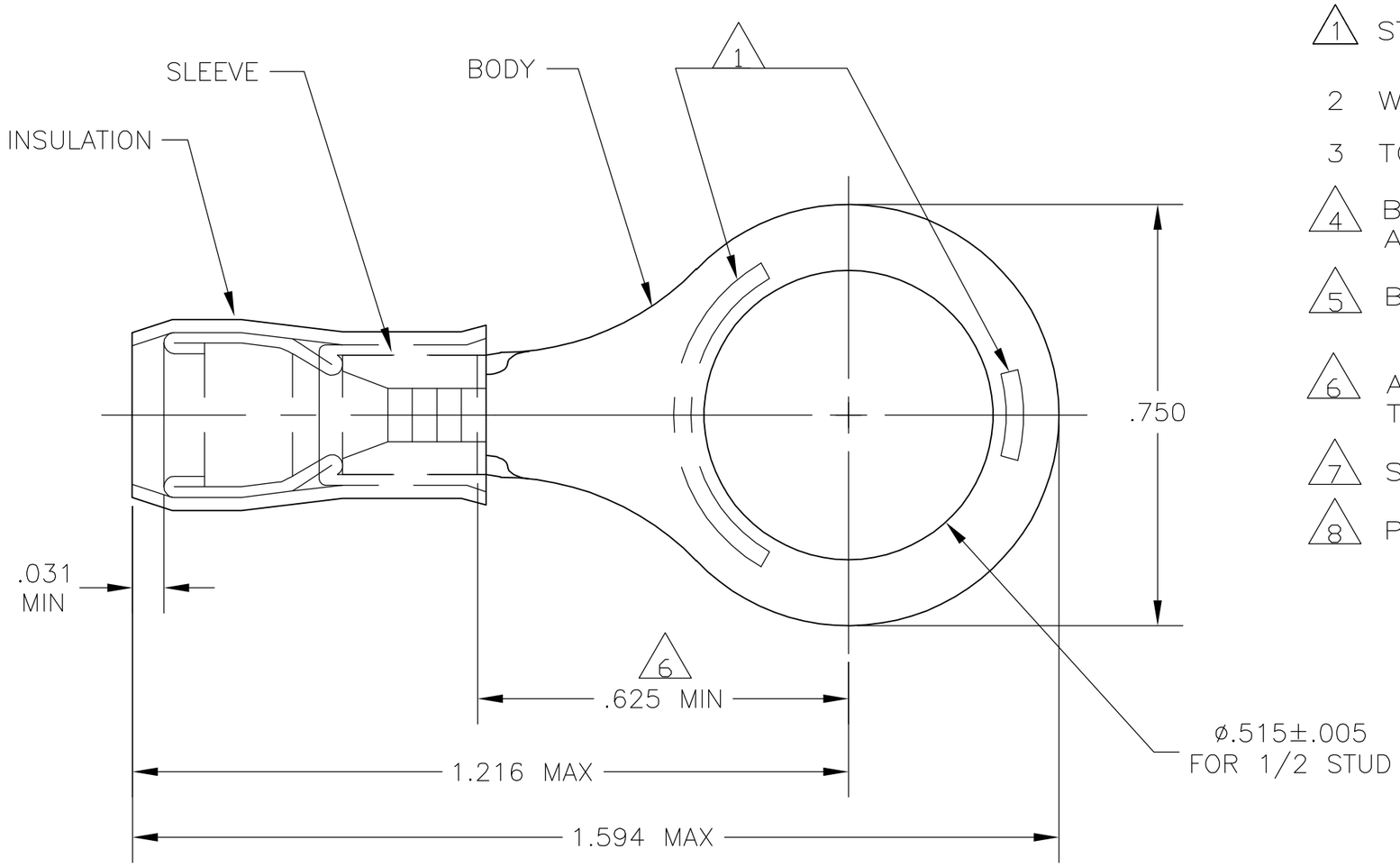

1. STAMP AMP 12-10* 6-9 APPROX AS SHOWN
2. WIRE INSULATION DIA: .150-.250
3. TONGUE MATERIAL THK: .039±.002
4. BODY & SLEEVE: TIN PLATE PER ASTM B545
5. BODY & SLEEVE- CU PER ASTM B152
   INSULATION - NYLON, COLOR - YELLOW
6. APPLIES FROM EDGE OF METAL WIRE BARREL TO CENTER OF STUD HOLE.
7. SUPERSEDED BY 8-35151-2
8. PRELIMINARY - NOT FOR PRODUCTION

QTY	PACKAGE TYPE	PART NO
25	LOOSE PIECE, BOX	8-35151-4 (7)
50	LOOSE PIECE, BOX	8-35151-2
1000	TAPE & REEL	2-35151-2 (8)
500	LOOSE PIECE	35151

AMP INCORPORATED
CUSTOMER SERVICE SYSTEMS

FOR ADDITIONAL PRODUCT INFORMATION OR COPIES OF DRAWINGS AND TECHNICAL DOCUMENTS	PRODUCT INFORMATION CENTER 1-800-522-6752
FOR APPLICATION TOOLING INFORMATION	TOOLING ASSISTANCE CENTER 1-800-722-1111
FOR ORDER ENTRY	1-800-526-5142

THIS DRAWING IS A CONTROLLED DOCUMENT FOR AMP INCORPORATED. IT IS SUBJECT TO CHANGE AND THE CONTROLLING ENGINEERING ORGANIZATION SHOULD BE CONTACTED FOR THE LATEST REVISION.

MAX RECOMMENDED OPERATING TEMPERATURE: 105°C MAX

VOLTAGE RATING: -

CIRCULAR MIL AREA: 2.62-6.64mm² [5,180-13,100] STRANDED OR SOLID

THIS DRAWING IS A CONTROLLED DOCUMENT.

DIMENSIONS: INCHES

TOLERANCES UNLESS OTHERWISE SPECIFIED:

0 PLC	± -
1 PLC	± -
2 PLC	± -
3 PLC	± .008
4 PLC	± -
ANGLES	± -

MATERIAL - (5)

FINISH - (4)

DWN	JR RUTH	20FEB07
CHK	T MICHIELUTTI	20FEB07
APVD	T MICHIELUTTI	20FEB07
PRODUCT SPEC	—	
APPLICATION SPEC	—	
WEIGHT	—	

tyco Electronics
Tyco Electronics Corporation
Harrisburg, Pa 17105-3608

NAME: TERMINAL, RING TONGUE, P.I.D.G. WIRE SIZE: 12-10 AWG

SIZE	CAGE CODE	DRAWING NO	RESTRICTED TO
A3	00779	C-35151	—

CUSTOMER DRAWING

SCALE	SHEET	REV
4:1	1 OF 1	G1

AMP 1470-19 REV 31MAR2000