Alle Rechte vorbehalten/ *All rights reserved*

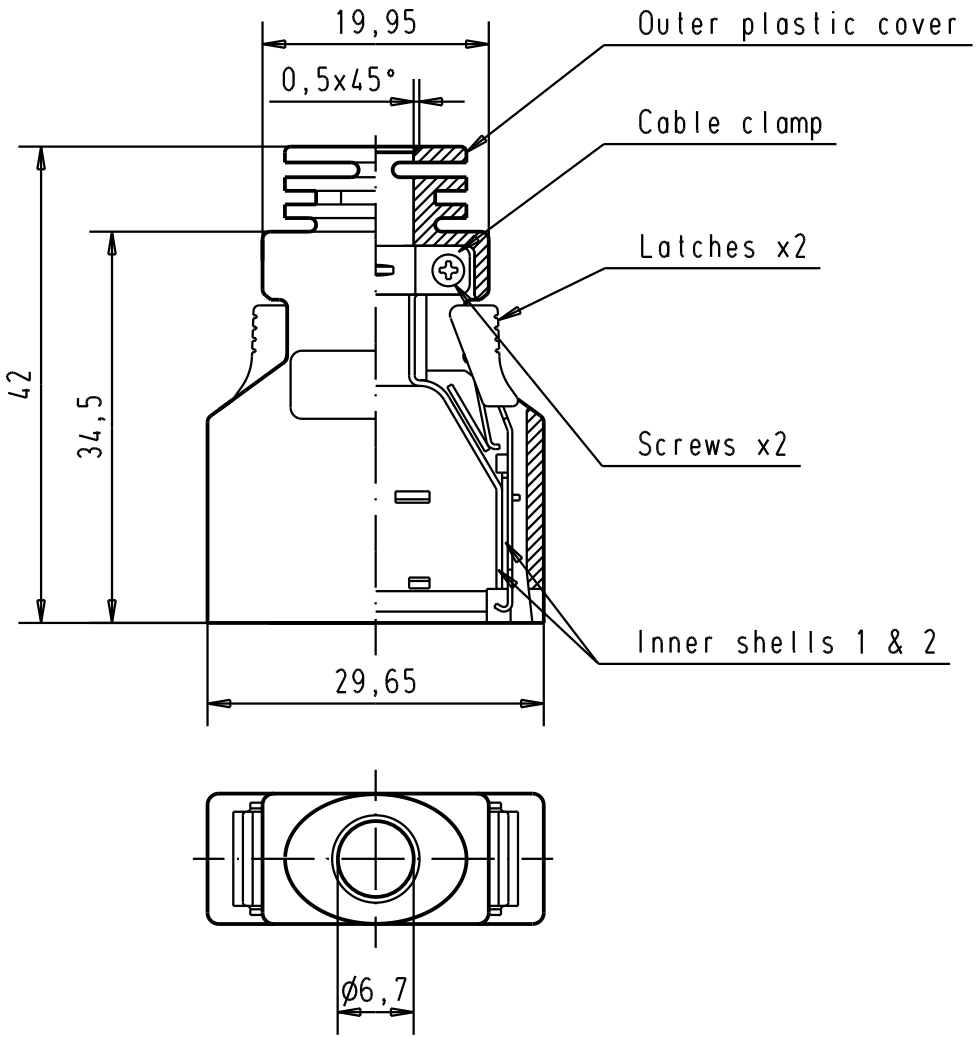

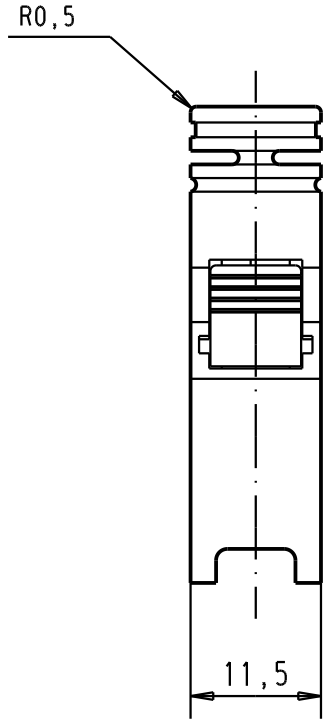

				Dat.	Name	All Dim. in mm Orig. Size DIN A 4	*har.mik®* I/O pin/socket 20 poles plastic hood with metal insert for IDC male bellow connector
			Detail.	23-MAY-02	CV		Maßstab/ *Scale* 1,5:1
			Insp.				
			Stand.				
60 13 020 0153 110	black	33461	11/04/06	JMDR	HARTING EURL F-95972 Paris		TB 60 13 020 0153
60 13 020 0153	standard color	31051	23-MAY-02	CV			Blatt/ *Page* 1/1
part number	hood color	Mod.	Dat.	Name			Sub.