WIRING DIAGRAMS

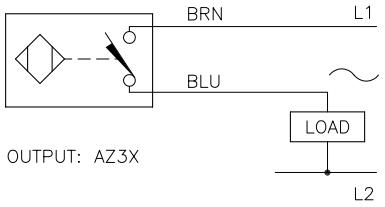

OUTPUT: AZ3X

WARNING: NO SHORT–CIRCUIT PROTECTION
ALWAYS WIRE A LOAD IN SERIES WITH THE SENSOR.

LOCKNUT LN–P30

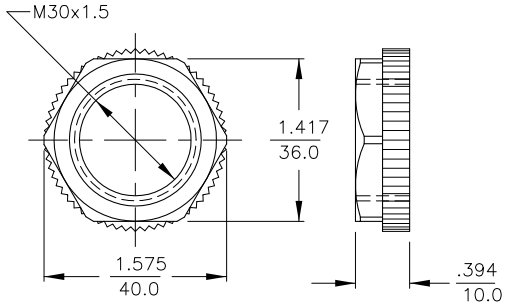

SPECIFICATIONS

RATED OPERATING DISTANCE	10mm = .394"
MOUNTING MODE	FLUSH
REPEAT ACCURACY	≤ 2%
TEMPERATURE DRIFT	≤ ± 10%
HYSTERESIS	3–15%
AMBIENT TEMPERATURE	–25°C to +70°C (–13°F to +158°F)
OPERATING VOLTAGE (VAC/VDC)	20–250 VAC/10–300 VDC
OPERATIONAL CURRENT (AC/DC)	≤ 400 mA/≤ 300 mA
MAINS FREQUENCY	50–60 Hz
RESIDUAL CURRENT	≤ 1.7 mA
RATED INSULATION VOLTAGE	≤ 1.5 kV
SURGE CURRENT	≤ 8.0 mA (≤ 10 ms Max. 5 Hz)
MAX. VOLTAGE DROP	≤ 6.0 V
OUTPUT FUNCTION	4–WIRE, NORMALLY OPEN
SMALLES OPERATING CURRENT	≥ 3 mA
SWITCHING FREQUENCY	≤ 0.02 kHz
HOUSING MATERAL	PLASTIC, PA12–GF20
ACTIVE FACE MATERIAL	PLASTIC, PA12–GF30
END CAP MATERIAL	PLASTIC, EPTR
CABLE	ø5.2, LifYY, PVC,
VIBRATION RESISTANCE	55 Hz (IN ALL 3 PLANES)
SHOCK RESISTANCE	30 g, 11 ms
PROTECTION DEGREE	IP67
SWITCHING STATUS INDICATION	LED; YELLOW

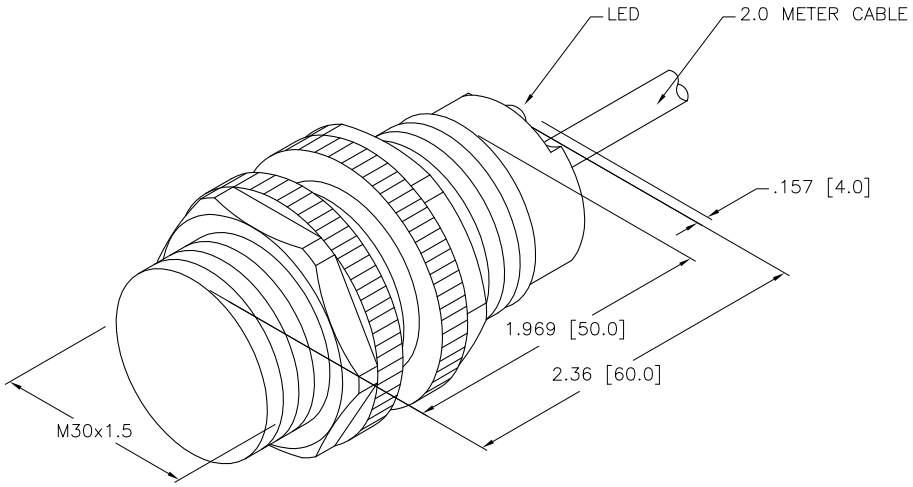

REV	DESCRIPTION	BY	DATE	ECO NO.
C	UPDATE OPERATING VOLTAGE, SEE ECO	RWC	08/09/07	18320

RELATED DOCUMENTS
1.
2.
3.
4.

3RD ANGLE PROJECTION

TURCK INC
High Technology Sensors and Automation Controls
3000 CAMPUS DRIVE
MINNEAPOLIS, MN 55441
1–800–544–7769
(763) 553–7300
(763) 553–0708 fax
turck.com

MATERIAL: SEE SPECIFICATIONS

FINISH: SEE SPECIFICATIONS

ALL DIMENSIONS DISPLAYED ON THIS DRAWING ARE FOR REFERENCE ONLY

CONTACT TURCK FOR MORE INFORMATION

DRFT: GMB | DATE: 10/31/88
DSGN: – | SCALE: 1=1.3

UNIT OF MEASUREMENT
INCH [MILLIMETER]
DO NOT SCALE THIS DRAWING

DESCRIPTION: Bi10–S30–AZ3X

IDENTIFICATION NO.: T4355400 | REV: C

FILE: T4355400 | SHEET 1 OF 1