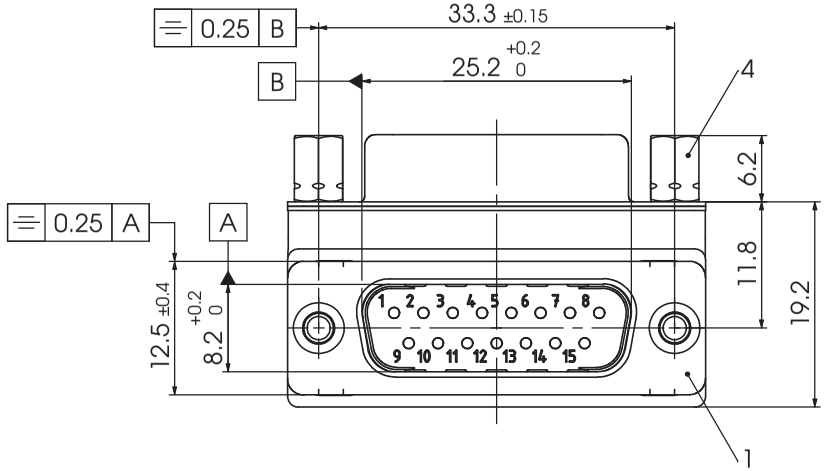


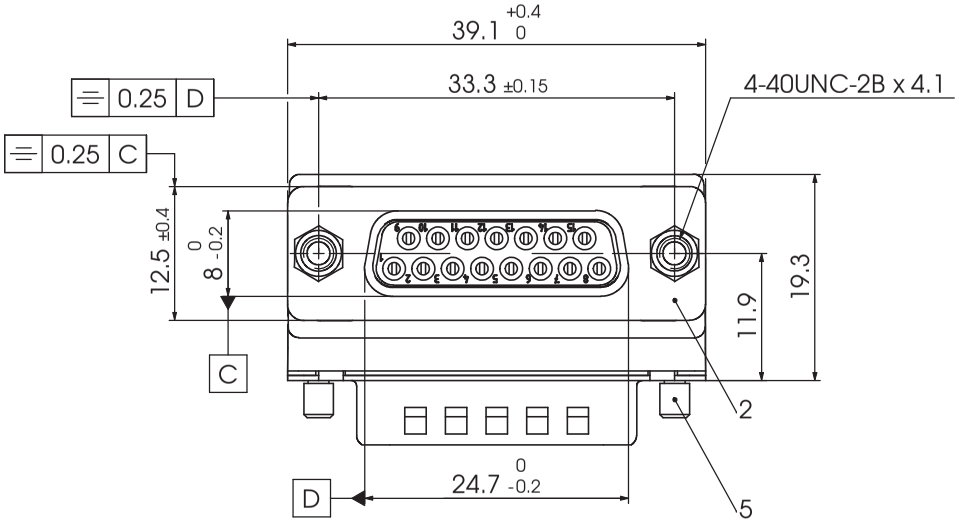


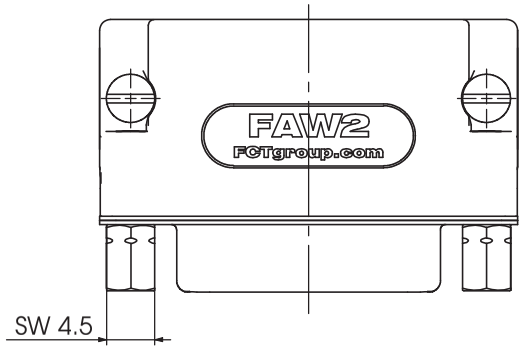


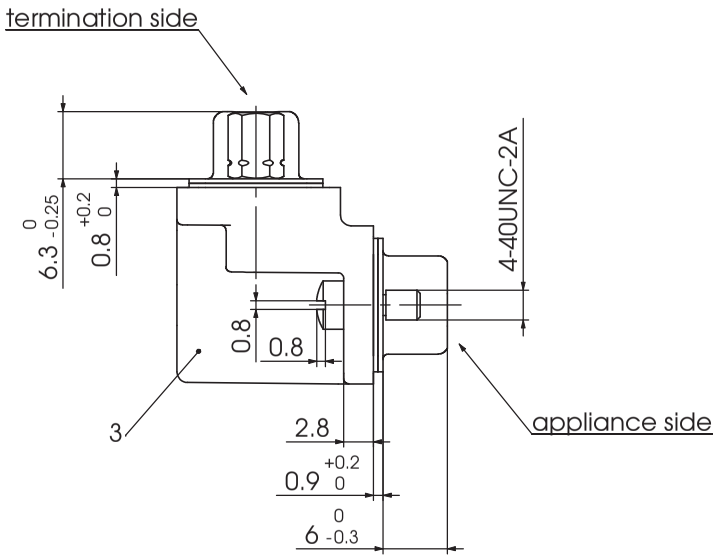


y for performance classes 1,2 or 3
(contact cycle for G1/G2/G3 = 500/200/50)

| No. | St. | Part | Type Description/Material | Surface plating/Colour/Class |
|---|---|---|---|---|
| 5 | 2 | Mounting screw | 4-40 / Brass | nickel plated |
| 4 | 2 | Female screw lock | F-GSCH1/5-K441 / Steel | tin plated |
| 3 | 1 | Hood | FAW2 / Zinc die-cast | nickel plated |
| 2 | 1 | D-Sub Connector | F15S13RGy-2874 | tin plated |
| 1 | 1 | D-Sub Connector | F15P13G0-2651 | tin plated |

Measurement without tolerance acc. to ISO 2768-m

SCALE 2:1

TITLE: Shielded-Right Angled Adapter

| | NAME / DATE |
|---|---|
| DRAWN | birgit.rinder 18-10-2011 |
| CHECKED | sschref 19-10-2011 |

FCT group
fctgroup.com

DWG.NO. FAW2PSGyU-4476

REV. 1

| REV. | DATE | CH.-NO. |
|---|---|---|
| 1 | | |

ORIGINAL: DIN A3-DRAWING AS A FILE

REPLACEMENT FOR:

PAGES 1

COMMENT:
ALL RIGHTS ARE RESERVED BY US FOR THIS DRAWING, WITHOUT OUR PRIOR CONSENT,
IT MAY NEITHER BE DUBLICATED NOR MADE AVAILABLE TO A THIRD PARTY,
AND IT ALSO MAY NOT BE IMPROPERLY USED BY TE RECEIVER, OR A THIRD PARTY.