EN

Professionally approved products.

Datasheet

DP Lever Microswitch, 0.5 A@ 125 V dc, 1.5 A@ 125 V dc, 10 A@ 125 V ac, 15 A@ 125 V ac

RS Stock 797-2564

Dimensions: (mm)

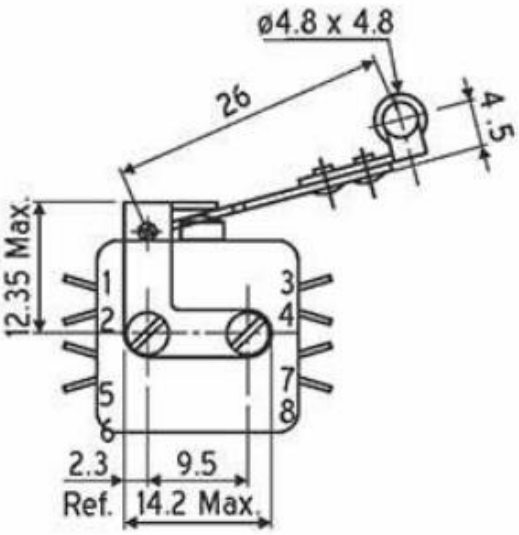

LEVER WIDTH 4.7 mm.

RS, Professionally Approved Products, gives you professional quality parts across all products categories. Our range has been testified by engineers as giving comparable quality to that of the leading brands without paying a premium price.

Professionally approved products.

Datasheet

Specifications

Characteristics	
Actuating force	150gms (max)
Release force	25gms (min)
Pretravel	9.5mm (max)
Movement differential	4.5mm (min)
Auxilary actuator which may be used with MV1 switch. It is 26mm. Long lever fitted with a free running nylon roller of 4.8mm. Lever ratio 5.5:1	

Characteristics

- 4 circuit, double pole, double break
- Snap action through spring controlled pivoted contact carrying arms
- Rapid changeover of contacts
- 2 No + 2 NC contacts
- Long mechanical & electrical life
- Silver or Gold plated solder terminals
- Conform to IEC 1058-1 standard